GREEN RIVER COMMERCE PARK

CONTRACT 3: WATER, SEWER, AND GAS EXTENSIONS

VICINITY MAP

NTS

INDEX OF DRAWINGS	
Sheet Number	Title
---	COVER
GEN	GENERAL NOTES
W-1	WATER EXTENSION
WD-1	STANDARD WATER DETAILS
SS-0	LIFT STATION DETAILES
SS-1	SANITARY SEWER GRAVITY LINES
SS-FM1	SANITARY SEWER FORCE MAIN
SS-FM2	SANITARY SEWER FORCE MAIN
SD-1	STANDARD SEWER DETAILS
SD-2	STANDARD SEWER DETAILS
G-1	GAS LINE EXTENSION
GD-1	STANDARD GAS DETAILS
GD-2	STANDARD GAS DETAILS

UTILITIES

Electricity:
Taylor County RECC
Barry Myers, Manager, Taylor County RECC
PHONE:
(270) 465-4101
(800) 931-4551

Sewer:
Columbia/Adair Utilities District
Facility Contact: Lenny Stone
Facility Phone: 270 384 2181
Facility Addr1: P.O. Box 567
Facility Addr2: 109 Grant Lane
Facility City, State Zip: Columbia , KY 42728

Water:
Columbia/Adair Utilities District
Facility Contact: Lenny Stone
Facility Phone: 270 384 2181
Facility Addr1: P.O. Box 567
Facility Addr2: 109 Grant Lane
Facility City, State Zip: Columbia , KY 42728

Natural Gas
City of Columbia Gas Department
Gas Superintendent Ronald Cook
Phone: (270) 384-2006
emergency after hours call (270) 384-2006

Bobby Morrisson
Chairman
Columbia-Adair County Economic Development Authority, Inc.
201 Burkesville Street
PO Box 116
Columbia, KY 42728
Phone: 270-384-4401
FAX: 270-384-2056

Natural Gas Transmission Line:
Contact: Taylor Price
TC Energy
170 Jackie Hollow Road
Liberty KY 42539
Phone: 606-787-3945

MSE PROJECT No. 2060-13

MSE OF KENTUCKY, INC.
624 Wellington Way - Lexington, Ky. 40503 - Phone: (859)223-5694 - Fax: (859)223-2607

STATE OF KENTUCKY
2/24/24
D SCOTT TAYLOR
11400
LICENSED PROFESSIONAL ENGINEER

GENERAL NOTES:

1. PRIOR TO ANY CONSTRUCTION OR DEMOLITION ACTIVITIES, THE CONTRACTOR SHALL BE RESPONSIBLE FOR VERIFYING LOCATIONS OF ALL EXISTING UTILITIES WITHIN THE PROJECT LIMITS. CONTRACTOR SHALL MAINTAIN UNINTERRUPTED UTILITY SERVICE TO ADJACENT FACILITIES DURING CONSTRUCTION. CONTRACTOR SHALL COORDINATE WORK WITH UTILITY OWNERS. SHOULD DAMAGE OCCUR TO EXISTING OR NEW UTILITY SERVICES DURING CONSTRUCTION, IT IS THE CONTRACTOR'S SOLE RESPONSIBILITY TO REPAIR AND/OR REPLACE SAID DAMAGE AT THE CONTRACTOR'S EXPENSE AT NO ADDITIONAL COST TO THE OWNER. NEW UTILITY WORK, REPAIRS, REPLACEMENTS AND/OR RELOCATIONS SHALL MEET THE APPROVAL OF THE UTILITY OWNER.

2. CONTRACTOR TO MARK AND PROTECT ALL UNDERGROUND UTILITIES AND OVERHEAD OBSTRUCTIONS.

3. CONTRACTOR SHALL BE RESPONSIBLE FOR OBTAINING ALL REQUIRED PERMITS INCLUDING GRADING PERMIT FROM LOCAL AUTHORITIES AND THE SUBMISSION OF A NOTICE ON INTENT (NOI) FOR STORMWATER DISCHARGE WITH THE KENTUCKY DEPARTMENT OF WATER PRIOR TO ANY CONSTRUCTION ACTIVITY. UPON COMPLETION OF THE PROJECT, THE CONTRACTOR SHALL SUBMIT A NOTICE OF TERMINATION (NOT) TO THE KENTUCKY DIVISION OF WATER. THE CONTRACTOR SHALL PROVIDE THE ENGINEER WITH A COPY OF ALL PERMITS OBTAINED.

4. VEGETATIVE AND STRUCTURAL EROSION AND SEDIMENT CONTROL PRACTICES SHALL BE CONSTRUCTED AND MAINTAINED ACCORDING TO MINIMUM STANDARDS AND SPECIFICATIONS OF THE "KENTUCKY BEST MANAGEMENT PRACTICES FOR CONSTRUCTION ACTIVITIES" DATED AUGUST 1994 AS PREPARED BY THE DIVISION OF CONSERVATION AND DIVISION OF WATER, NATURAL RESOURCES AND ENVIRONMENTAL PROTECTION CABINET AND/OR THE KENTUCKY TRANSPORTATION CABINET (KYTC) STANDARDS. CONTRACTOR SHALL USE THE "KENTUCKY EROSION PREVENTION AND SEDIMENT CONTROL FIELD GUIDE" AS THE DEFINITION OF REQUIREMENTS FOR CONSTRUCTION ACTIVITY.

5. EROSION AND SEDIMENT CONTROL MEASURES MUST BE IN PLACE AND FUNCTIONAL BEFORE EARTH MOVING OPERATIONS BEGIN AND MUST BE PROPERLY MAINTAINED THROUGHOUT THE CONSTRUCTION PERIOD. CONTRACTOR SHALL BE RESPONSIBLE FOR INSTALLATION OF ANY ADDITIONAL EROSION CONTROL MEASURES NECESSARY TO PREVENT EROSION AND SEDIMENTATION AS DETERMINED BY OWNER OR THE GOVERNING AGENCY. CONTRACTOR SHALL INSPECT ALL EROSION CONTROL MEASURES WEEKLY AND AFTER EACH RUN-OFF PRODUCING RAINFALL EVENT. ANY NECESSARY REPAIRS OR CLEANUP TO MAINTAIN THE EFFECTIVENESS OF THE EROSION AND SEDIMENT CONTROL DEVICES SHALL BE MADE IMMEDIATELY WITHIN 24 HOURS.

6. CONTRACTOR SHALL BE RESPONSIBLE FOR PROVIDING AND MAINTAINING CONSTRUCTION ENTRANCES AND SHALL KEEP ALL ROADS AND STREETS FREE ROM MUD, DIRT AND DEBRIS.

7. THE CONTRACTOR MUST PROVIDE TRAFFIC CONTROL IN ACCORDANCE WITH THE MANUAL FOR UNIFORM TRAFFIC CONTROL DEVICES AND THE KENTUCKY DEPARTMENT OF HIGHWAYS GUIDANCE MANUAL.

8.THE CONTRACTOR MUST MAINTAIN ACCESS TO EXISTING BUSINESSES AND EXISTING ROADS.

9. IN ADDITION TO PREVENTING SEDIMENT AND EROSION CONTROL DURING CONSTRUCTION, THE CONTRACTOR MUST MINIMIZE OR ELIMINATE THE POTENTIAL FOR CHEMICAL CONTAMINANTS TO ENTER THE SOIL OR BE CARRIED ACROSS THE SITE BY STORM WATER. POTENTIAL CONTAMINANTS NORMALLY ASSOCIATED WITH CONSTRUCTION ACTIVITY INCLUDE GASOLINE AND DIESEL FUEL, OIL, GREASE, ANTIFREEZE, TERMITE SOIL TREATMENT CHEMICALS, FERTILIZER, ASPHALT OILS, EMULSIONS AND SMALL PARTICLE SIZE CONSTRUCTION DEBRIS. THE CONTRACTOR MUST EMPLOY VARIOUS BEST MANAGEMENT PRACTICES TO ELIMINATE OR MINIMIZE THE POTENTIAL FOR THESE CONTAMINANTS TO REACH THE SOIL AND/OR DRAINAGE SYSTEMS.

10. ALL SURFACE RUNOFF SHALL BE DIRECTED AWAY FROM ROADWAYS AND BUILDINGS AND DIRECTED TO DRAINAGE STRUCTURES, DITCHES OR SWALES.

11. CONTRACTOR SHALL ACCURATELY RECORD ALL UTILITIES CONSTRUCTED OR ENCOUNTERED ON "AS-BUILT" DRAWINGS AND PROVIDE TO OWNER AND ENGINEER.S SHA

12. MATERIALS AND METHODS OF CONSTRUCTION FOR GRADING AND DRAINAGE STRUCTURES INCLUDING PIPING AND HEADWALLS SHALL BE IN ACCORDANCE WITH KENTUCKY TRANSPORTATION CABINET (KYTC) "STANDARD SPECIFICATIONS FOR ROAD AND BRIDGE CONSTRUCTION", CURRENT EDITION.

13. CONTRACTOR SHALL NOTIFY ENGINEER OF ANY AREAS WHERE UNACCEPTABLE SOILS, SINKHOLES, WET AREAS OR OTHER CONDITIONS ARE ENCOUNTERED WHICH MAY ADVERSELY AFFECT THE SITE. IF DIRECTED BY ENGINEER, REMOVE UNSUITABLE SOILS AND REPLACE THEM WITH ACCEPTABLE SOILS.

14. EARTH AND ROCK WORK IS UNCLASSIFIED. NO EXTRA PAYMENT WILL BE MADE FOR ROCK EXCAVATION.

15. CONTRACTOR SHALL MAKE MINOR ADJUSTMENTS IN GRADING PLAN AS NECESSARY TO PROVIDE FOR SMOOTH TRANSITION FOR EXISTING ENTRANCES.

16. ALL SPOT ELEVATIONS INDICATE FINISH GRADE OF SURFACE. CONTRACTOR SHALL MAKE ADJUSTMENTS TO ESTABLISH GRADES OF SUB-BASE OR SUBGRADE.

17. IT SHALL BE THE CONTRACTOR'S SOLE RESPONSIBILITY TO DETERMINE EARTHWORK (EXCAVATION AND EMBANKMENT) QUANTITIES.

18. AREAS TO BE FILLED, EXCAVATED, LANDSCAPED, OR REGRADED SHALL BE STRIPPED OF ALL VEGETATION AND TOPSOIL. ALL TOPSOIL SHALL BE STOCKPILED FOR REDISTRIBUTION. STOCKPILE AREAS SHALL HAVE SOIL EROSION PROTECTION IN THE FORM OF SILT FENCING INSTALLED AROUND THE PERIMETER OR OTHER SUCH ACCEPTABLE MEASURES.

19. ALL SOIL FILL MATERIAL PLACED ON THIS PROJECT SHOULD BE COMPACTED WITH APPROPRIATE EQUIPMENT IN UNIFORM LAYERS TO THE MODIFIED PROCTOR MAXIMUM DRY DENSITY (ASTM D-1557) AS RECOMMENDED IN THE GEOTECHNICAL REPORT FOR THIS PROJECT.

20. FILL MATERIAL SHALL BE PROPERTY MONITORED USING FIELD DENSITY TEST CHECKS. ALL TESTING SHALL BE PROVIDED BY A QUALIFIED INDEPENDENT TESTING AGENCY. SHOULD REPORTS INDICATE SPECIFIED COMPACTION IS NOT ACHIEVED, THE CONTRACTOR SHALL REMOVE MATERIAL, REPLACE, AND RETEST AT NO ADDITIONAL COST TO THE OWNER UNTIL ACCEPTABLE RESULTS ARE ACHIEVED. COPIES OF TEST REPORTS SHALL BE PROVIDED TO THE ENGINEER.

21. CONTRACTOR SHALL PROVIDE REDISTRIBUTION OF STOCKPILED OR IMPORT TOPSOIL AS REQUIRED OVER ALL FINISHED GRADE SOIL ARES TO A MINIMUM OF 12 INCHES AND PROVIDE FINAL SITE GRADING TO INSURE POSITIVE DRAINAGE AWAY FROM ROADWAYS AND BUILDINGS. AFTER FINAL GRADING, ANY LOW SPOTS WHICH ALLOW WATER TO POND SHALL MAKE ANY NECESSARY MINOR GRADE ADJUSTMENTS AS REQUIRED TO BEST FIT THE ACTUAL SITE CONDITIONS. CONTRACTOR SHALL PROVIDE BORROW MATERIAL AS REQUIRED FOR FILLING EXCAVATIONS, HOLES AND OTHER SUCH OPENINGS.

22. ALL EARTH GRADED AREAS SCARRED OR DENUDED BY THE CONSTRUCTION ACTIVITY SHALL BE SEEDED AND PROTECTED IN ADDITION TO THE PROVISIONS OF OTHER EROSION AND SEDIMENT CONTROL MEASURES AS REQUIRED.

23. ALL SURPLUS AND WASTE MATERIALS SHALL BE TRANSPORTED AND DISPOSED OF OFF-SITE IN ACCORDANCE WITH ALL APPLICABLE LOCAL, STATE AND FEDERAL REGULATIONS AND CODES UNLESS OTHERWISE APPROVED BY OWNER. NO BURNING OR BURYING OF TREES, BRUSH, CONSTRUCTION DEBRIS, RUBBISH, ETC. SHALL BE ALLOWED ON SITE UNLESS OWNER APPROVAL IS OBTAINED.

UTILITY CONSTRUCTION WITHIN ROADWAY AREA

NO ADDITIONAL FUNDS WILL BE PAID TO CONTRACTOR FOR SPECIAL CONSTRUCTION NECESSARY TO COMPLY WITH THE FOLLOWING REQUIREMENTS:

UTILITY CONTRACTOR SHALL INSURE THAT FINISHED PIPELINES, BOTH WATER AND SEWER, HAVE SPECIFIED DEPTH OF COVER FROM FINISHED GRADES, INCLUDING ROADWAY AND ROADWAY DITCHES. CAREFUL ATTENTION SHALL BE PAID TO AVOID CONFLICT WITH PROPOSED DITCHES, STORM DRAINS AND ROADWAY EXCAVATION. BACKFILL IN PIPELINES WITHIN THE ROADWAY LIMITS (PAVEMENT AND SHOULDERS) SHALL BE CRUSHED STONE AS SPECIFIED. UTILITY CONTRACTORS SHALL INCLUDE EXTRA DEPTH TRENCHING IF NECESSARY TO YIELD REQUIRED COVER AFTER ROADWAY EXCAVATION AND USE CRUSHED STONE TO THE ELEVATION NECESSARY TO YIELD A CRUSHED STONE TRENCH BACKFILL UNDER PAVEMENT AND SHOULDERS.

UTILITY GENERAL NOTES

EXISTING GRADE ELEVATIONS SHOWN IN PROFILE AND CONTOURS SHOWN IN PLAN VIEW WERE COMPILED BY COMPUTER METHODS FROM AERIAL PHOTOGRAPHY.

CONTRACTOR IS TO PERFORM LAY-OUT AND PRODUCE CUT-SHEETS FOR VERIFICATION OF LINE DEPTHS AND MANHOLE QUANTITIES. CONTRACTOR SHALL UTILIZE CUT-SHEETS IN THE PREPARATION OF HIS AS-BUILT DRAWING TO ACCURATELY PORTRAY THE PROFILE. CUT-SHEETS WILL BE FIELD VERIFIED BY ENGINEER. CONTRACTOR SHALL, DETERMINE THE BOUNDS OF CONSTRUCTION EASEMENTS AND RIGHT-OF-WAYS AND CONFINE ALL CONSTRUCTION ACTIVITY TO THESE AREAS, PROVIDE CONSTRUCTION WARNING SIGNS, BARRICADES AND FLAGMEN AS NECESSARY. CONTRACTOR SHALL PREVENT SOIL EROSION, CONTROL SILT RUN-OFF, PROVIDE MULCH, SILT FENCES, STRAW BALES OR OTHER MEASURES AS NECESSARY. CONTRACTOR SHALL LOCATE ANY EXISTING UTILITIES.

WHERE EXISTING UTILITIES ARE SHOWN, LOCATIONS ARE APPROXIMATE. CONSULT WITH APPLICABLE UTILITY COMPANIES TO DETERMINE EXACT LOCATIONS OF MAINS AND SERVICE LINES PRIOR TO ANY EXCAVATION. CONTRACTOR SHALL BE RESPONSIBLE FOR PROTECTING PRIVATE PROPERTY. BORE ALL ASPHALT AND CONCRETE PAVEMENT UNLESS THE OWNER APPROVES OPEN CUTTING AND REPAIR. DO NOT CUT FENCES UNLESS THE OWNER APPROVES CUTTING AND REPAIR. PRESERVE TREES AND SHRUBS.

THE CONTRACTOR SHALL HAVE ON HAND AT THE JOB SITE 11¼, 22½, 45, AND 90 DEGREE BENDS TO ALLOW FOR THEIR USE WHERE THE ENGINEER REQUIRES INSTALLATION AS NECESSARY.

PIPE JOINT DEFLECTION IS NOT TO EXCEED MANUFACTURER'S ALLOWABLE LIMITS.

AT SOME LOCATIONS, THE CONTRACTOR MAY BE REQUIRED TO PROVIDE EXTRA COVER OVER LINE. COST OF EXTRA COVER IS TO BE INCLUDED IN UNIT PRICE BID FOR LINE INSTALLATION AND NO SEPARATE PAYMENT WILL BE MADE FOR SUCH EXTRA COVER. ALL SUCH LOCATIONS ARE SHOWN ON THE PLANS.

AIR RELEASE VALVE AND AIR VACUUM VALVE LOCATIONS SHOWN ON THE PLANS ARE GENERAL. THE EXACT LOCATIONS SHOULD BE AT THE LOCAL HIGH ELEVATION IN THE VICINITY OF THE ARV OR AVV SHOWN ON THE PLANS.

WATER AND SEWER SEPARATION REQUIREMENT

WATER AND SEWER PARALLEL CONSTRUCTION
ALL WATER AND SEWER FACILITIES SHALL BE SEPARATED BY A MINIMUM OF 10 FEET MEASURED AS THE SHORTEST DISTANCE BETWEEN CLOSEST POINTS. NO WATER MAIN MAY BE CONSTRUCTED WITHIN 10 FT OF A SEWER MAIN, FORCE MAIN, MANHOLE OR ANY OTHER APPURTENANCE EXCEPT FOR CROSSINGS SHOWN ON THE PLANS. CROSSING SHALL MEET THE FOLLOWING REQUIREMENT.

WATER AND SEWER CROSSING
SEWERS CROSSING WATER MAINS SHALL BE LAID TO PROVIDE A MINIMUM VERTICAL DISTANCE OF 18 INCHES BETWEEN THE OUTSIDE OF THE WATER MAIN AND THE OUTSIDE OF THE SEWER. THIS SHALL BE THE CASE WHERE THE WATER MAIN IS EITHER ABOVE OR BELOW THE SEWER. THE CROSSING SHALL BE ARRANGED SO THAT THE SEWER JOINTS WILL BE EQUIDISTANT AND AS FAR AS POSSIBLE FROM THE WATER MAIN JOINTS. WHERE A WATER MAIN CROSSES UNDER A SEWER, ADEQUATE STRUCTURAL SUPPORT SHALL BE PROVIDED FOR THE SEWER TO MAINTAIN LINE AND GRADE.

WHEN IT IS IMPOSSIBLE TO OBTAIN PROPER HORIZONTAL AND VERTICAL SEPARATION AS STIPULATED ABOVE, ONE OF THE FOLLOWING METHODS SHALL BE REQUIRED:
A. THE SEWER SHALL BE DESIGNED AND CONSTRUCTED EQUAL TO WATER PIPE.
B. EITHER THE WATER MAIN OR THE SEWER LINE MAY BE ENCASED IN A WATERTIGHT CARRIER PIPE THAT EXTENDS 10 FEET ON BOTH SIDES OF THE CROSSING, MEASURED PERPENDICULAR TO THE WATER MAIN. THE CARRIER PIPE SHALL BE MADE OF MATERIALS APPROVED BY THE REGULATORY AGENCY FOR USE IN WATER MAIN CONSTRUCTION.

STREAM CROSSING REQUIREMENTS

THE CONTRACTOR SHALL CONSTRUCT STREAM CROSSINGS IN ACCORDANCE WITH THE PLANS, SPECIFICATION AND THE FOLLOWING CONSTRAINTS:
(1) DURING THE CONSTRUCTION OF THE CROSSING, NO MATERIAL MAY BE PLACED IN THE STREAM OR IN THE FLOOD PLAIN OF THE STREAM TO FORM CONSTRUCTION PADS, COFFER DAMS, ACCESS ROADS, ETC.,
(2) THE TRENCH SHALL BE BACKFILLED AS CLOSELY AS POSSIBLE TO THE ORIGINAL CONTOUR. ALL EXCESS MATERIAL FROM CONSTRUCTION OF THE TRENCH SHALL BE DISPOSED OF OUTSIDE OF THE FLOOD PLAIN.
(3) FOR SUBFLUVIAL CROSSINGS OF ERODIBLE CHANNELS, THERE SHALL BE AT LEAST THIRTY (30) INCHES CLEAR TO THE TOP OF THE PIPE OR CONDUIT AT ALL POINTS.
(4) FOR SUBFLUVIAL CROSSINGS OF NONERODIBLE CHANNELS, THERE SHALL BE AT LEAST SIX (6) INCHES OF CLEAR COVER ABOVE THE TOP OF THE PIPE OR CONDUIT AT ALL POINTS, AND THE PIPE OR CONDUIT SHALL BE ENCASED ON ALL SIDES BY AT LEAST SIX (6) INCHES OF CONCRETE.

GENERAL NOTES

1. WHERE OFFSETS ARE NOTED UNLESS OTHERWISE STATED OR SHOWN, THEY ARE WITH RESPECT TO THE CENTERLINE OF THE HIGHWAY, ROAD, OR STREET, EDGE OF PAVEMENT, FENCELINE, ETC., ALONG WHICH THE WATERLINE TRAVERSES.
2. BEFORE CONSTRUCTION BEGINS NEAR OR THROUGH EXISTING UTILITIES (i.e. GAS CO., TELEPHONE CO., CABLE CO., ETC.) EACH UTILITY COMPANY SHALL BE NOTIFIED. A REQUEST FOR THE EXACT LOCATION OF THE UTILITY SHALL BE MADE, AND PERMISSION TO PROCEED WITH CONSTRUCTION OBTAINED.
3. BEFORE CONSTRUCTION BEGINS THROUGH ANY PROPERTY, THE CONTRACTOR SHALL MAKE HIMSELF AWARE OF THE EXACT LOCATION OF CONSTRUCTION THROUGH THE PROPERTY AND THE BOUNDS OF THE PERMANENT AND TEMPORARY CONSTRUCTION EASEMENTS.
4. PIPE JOINT DEFLECTION IS NOT TO EXCEED MANUFACTURER'S ALLOWABLE LIMITS.
5. AT SOME LOCATIONS, THE CONTRACTOR MAY BE REQUIRED TO PROVIDE EXTRA COVER OVER LINE. COST OF EXTRA COVER IS TO BE INCLUDED IN UNIT PRICE BID FOR LINE INSTALLATION AND NO SEPARATE PAYMENT WILL BE MADE FOR SUCH EXTRA COVER. ALL SUCH LOCATIONS ARE SHOWN ON THE PLANS.
6. CONNECTING NEW LINES TO EXISTING LINES OR TO WORK IN THEIR CONTRACTS IS SUBSIDIARY TO THE CONTRACT. IT INCLUDES FITTINGS, SLEEVES, ETC., BUT DOES NOT INCLUDE GATE VALVES, WHICH ARE EXTRA PAY ITEM.
7. AIR RELEASE VALVE AND AIR VACUUM VALVE LOCATIONS SHOWN ON THE PLANS ARE GENERAL. THE EXACT LOCATIONS SHOULD BE AT THE LOCAL HIGH ELEVATION IN THE VICINITY OF THE ARV OR AVV SHOWN ON THE PLANS.
8. ALL STREAM AND RIVER CROSSINGS GREATER THAN 15 FEET WIDE SHALL HAVE GATE VALVES INSTALLED ON EACH SIDE OF THE CROSSING. THE VALVE ON THE SOURCE SIDE SHALL HAVE A BY-PASS SERVICE METER INSTALLED FOR LEAK DETECTION.
9. ALL WATER LINES WITHIN 200 FEET RADIUS OF UNDERGROUND STORAGE TANKS (KRS-224.6-100), PETROLEUM STORAGE TANKS (KRS-224.60-115) AND ASSOCIATED PUMPS AND LINES SHALL BE DUCTILE IRON PIE WITH PETROLEUM RESISTANT JOINTS AND ALL SERVICE LINE SHALL BE COPPER.

UTILITY NOTES

2. CONTRACTOR SHALL NOTIFY APPROPRIATE UTILITY AT LEAST 48 HOURS PRIOR TO BEGINNING CONSTRUCTION IN THE AREA OF THE AFFECTED UTILITY.
3. ANY INTERRUPTIONS IN SERVICE MUST BE MINIMIZED AND SCHEDULED WITH THE UTILITY.
4. ALL CASINGS FOR FUTURE USE MUST BE SEALED AND MARKED AT EACH END WITH A STEEL POST MIN. 6' LENGTH.
5. ALL PIPE MATERIALS, FITTINGS, ETC. MUST MEET THE APPROVAL OF THE APPLICABLE UTILITY.

Know what's below. Call before you dig.

GENERAL NOTES

GREEN RIVER COMMERCE PARK
UTILITY EXTENSIONS

ADAIR COUNTY, KENTUCKY

DATE	REVISION	BY
-----	-----	
-----	-----	

PROJECT NO. 2077-04
DESIGNED BY: DSR
DRAWN BY: J.D.W.
CHECKED BY: G.A.R.
REVIEWED BY: GAR
DATE: JUNE 2023
SCALE: AS SHOWN

Engineers
Architects
Planners
OF KENTUCKY, INC.
624 Wellington Way
Lexington, KY 40503
www.mslky.com
Phone: (859)223-5684
Fax: (859)223-2607

DRAWING NO.
GND
SHEET OF

Plot Date 6/22/2023 11:50 PM
M:\PROJECTS\PARADISE PARK\ WATER AND SEWER EXTENSIONS\WORKING\DETAILS\PARADISE PARK\ WATER AND SEWER DETAILS-6-22-23.DWG

GREEN RIVER COMMERCE PARK

WATER AND SEWER EXTENSIONS

ADAIR COUNTY, KENTUCKY

DATE	REVISION	BY

© copyright

NOTICE: This document discloses subject matter considered confidential by MSE of Kentucky, Inc. and on which MSE of Kentucky, Inc. claims protection by copyright and other intellectual property laws. Therefore, no part of this document may be reproduced, distributed or transmitted in any form or by any means, by any person other than the client for whom it was prepared, or for any purpose without the written permission of MSE of Kentucky, Inc.

PROJECT NO.	2060-13
DESIGNED BY	D.S.T.
DRAWN BY	J.R.M.
CHECKED BY	D.S.T.
REVIEWED BY	D.S.T.
DATE	FEBRUARY 2024
SCALE	AS NOTED

MSE OF KENTUCKY, INC.
Engineers
Architects
Planners

624 Wellington Way
Lexington, KY 40503
www.mseky.com

Phone: (859)223-5694
Fax: (859)223-2607

DRAWING NO.

W-1

SHEET OF

MINIMUM TRENCH WIDTHS IN EARTH & MAXIMUM PAY WIDTHS FOR ROCK EXCAVATION					
SIZE	WIDTH	SIZE	WIDTH	SIZE	WIDTH
UP TO 4" PIPE	1'-6"	12" PIPE	2'-6"	18" PIPE	3'-0"
6"	2'-0"	14"	2'-6"	20"	3'-2"
8"	2'-0"	15"	2'-8"	21"	3'-4"
10"	2'-4"	16"	2'-8"	24"	3'-8"

NOTE: NO ROCKS LARGER THAN 1 1/2" SHALL BE ALLOWED IN TOP 6". TOP OF BACKFILL WILL BE UNIFORMILY ROUNDED ABOVE EXISTING GROUND FOR SETTLING.

NOTE: BACKFILL SHALL BE HAND PLACED BUT MAY BE MECHANICALLY PLACED IF APPROVED BY ENGINEER & SOLIDLY TAMPED BY HAND OR APPROVED MECHANICAL METHODS (MAY BE "WALKED-IN" WITH PVC PIPE) AROUND THE PIPE & TO A POINT 8" HIGHER THAN TOP OF THE PIPE & 12" HIGHER FOR A.C. PIPE. THE REMAINDER OF BACKFIL SHALL CONTAIN NO ROCKS LARGER THAN 18".

NOTE: NO ROCK LARGER THAN 1/2" ALLOWED

STANDARD BEDDING (SEE STANDARD BEDDING TABLE) FOR PVC PIPE MAY BE COMPACTED IN PLACE BY "WALKING-IN" FINELY GRADED SELECT MATERIAL. WHERE TRENCHING EQUIPMENT LEAVES SUITABLE BEDDING, SHOVELING OF ADDITIONAL BEDDING SHALL NOT BE REQUIRED. THE PIPE BARREL SHALL BE UNIFORMLY SUPPORTED FOR ITS FULL LENGHT.

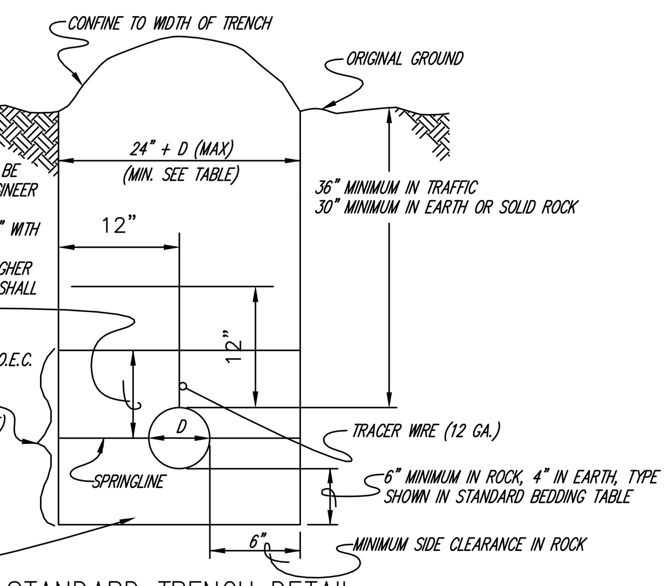

STANDARD TRENCH DETAIL

N.T.S. (WD1-05)

NOTE: AC PIPE CROSSINGS SUBSTITUTE BANK RUN SAND, IF NOT ENCASED, FOR SPEC. #78 STONE. ALL OTHER PIPE MATERIALS USE STONE.

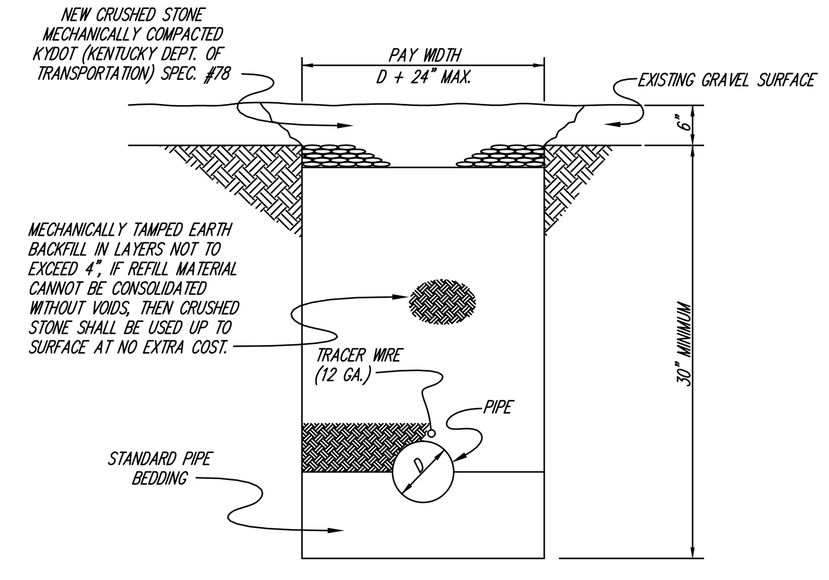

GRAVEL SURFACE

N.T.S. (WD1-01)

PIPE	BEDDING (REQ'D NO EXTRA PAYMENT)
PVC (4" AND SMALLER) COPPER, GALVANIZED	EARTH TRENCH BOTTOM (LEVELLED)
PVC (ABOVE 4"), ALL MUNICIPAL PVV	COMPACTED EARTH BACKFILL
C.I. AND D.I. (LESS THAN 4")	COMPACTED EARTH BACKFILL
C.I. AND D.I. (4" DIA. AND ABOVE)	COMPACTED CRUSHED STONE BACKFILL
ASBESTOS-CEMENT (ABOVE 4")	COMPACTED BANK RUN SAND

STANDARD BEDDING TABLE

(WD1-06)

NOTE: CONTRACTOR IS REQUIRED TO PROVIDE 4 - 22 1/2", 45", OR 90" VERTICAL BENDS AT EACH NORMAL OR SPECIAL CREEK CROSSING. CONTRACTOR AT HIS OPTION MAY EXTRA APPROACH TRENCH DEPTH TO AVOID USE OF BENDS. ALLOWABLE DEFLECTION OF PIPE MAY NOT BE EXCEED UNDER ANY SITUATION.

NOTE: BACKFILL 12" ABOVE PIPE W/COMPACTED EARTH & THEN FILL TRENCH W/EXCAVATED ROCK.

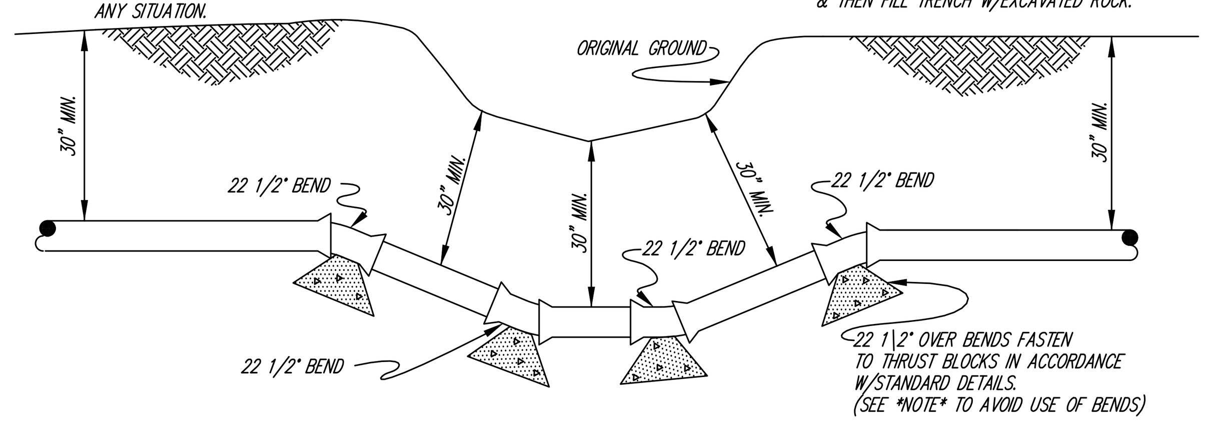

DETAIL OF NORMAL DITCH OR STABLE BED CREEK CROSSING WITHOUT ENCASEMENT

N.T.S. (NO EXTRA PAYMENT) (WD3-05)

*NOTE: ALL INSTALLATION IN ROCK WILL UTILIZE THE UNDERCUTTING METHOD W/6" CRUSHED STONE BEDDING (SAND FOR A.C.) PVC, COPPER, OR GALVANIZED MAY BE BEDDED IN ROCK ON 6" EARTH IF PIPE IS 4" DIA. OR LESS.

NOTE: UNDERCUTTING METHOD REQUIRED FOR ALL PVC, CAST IRON, & DUCTILE IRON PIPE 4" & ABOVE. OPTIONAL ON ALL OTHER SIZES. - A.C. PIPE OF ALL SIZES SHALL USE UNDERCUTTING METHODS, SEE SPECIFICATIONS. (SEE NOTE ELSEWHERE ON THIS SHEET FOR EXCEPTIONS FOR PVC PIPE.)

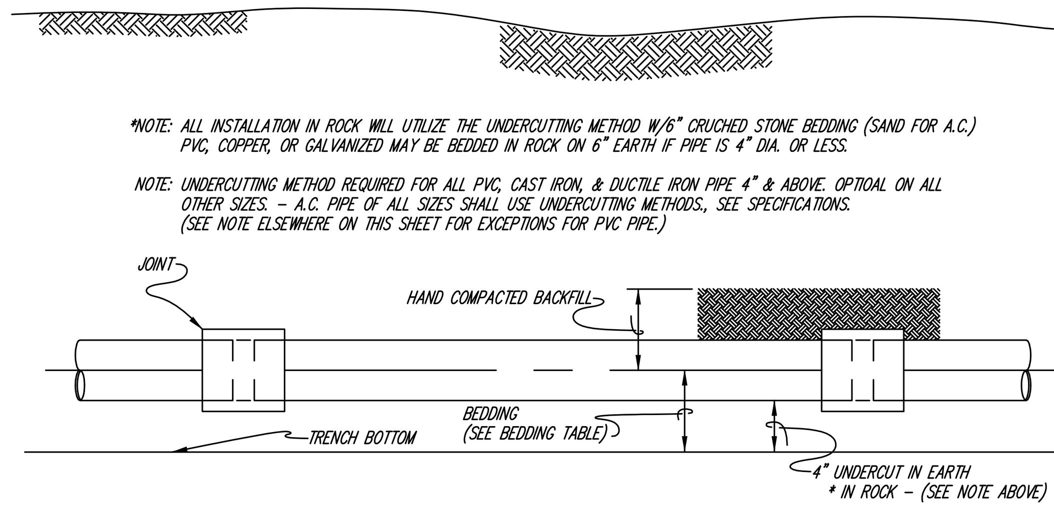

UNDERCUTTING METHOD

N.T.S. (WD1-06)

NOTE: UNDER ROAD CROSSINGS STEEL CASING PIPE SHALL BE REQUIRED, PIPES 4" & LESS SHALL BE NEW SCHEDULE 40, PIPES LARGER THAN 4" SHALL HAVE MINIMUM WALL THICKNESS OF 0.250". ALL BORED & JACKED ENCASEMENT PIPE SHALL BE INSTALLED IN BORE HOLES NO LARGER THAN THE OUTSIDE DIAMETER OF THE ENCASEMENT PIPE.

NOTE: ALL JOINTS TO BE SOLIDLY WELDED, END OF CASING TO BE SEALED W/CONCRETE AFTER LINE HAS BEEN INSTALLED & TESTED.

NOTE: OPEN TRENCH NO CLOSER THAN THE DITCHLINE FROM THE EDGE OF THE PAVEMENT OR AS DIRECTED BY STATE, COUNTY, OR MUNICIPAL SPECIFICATIONS.

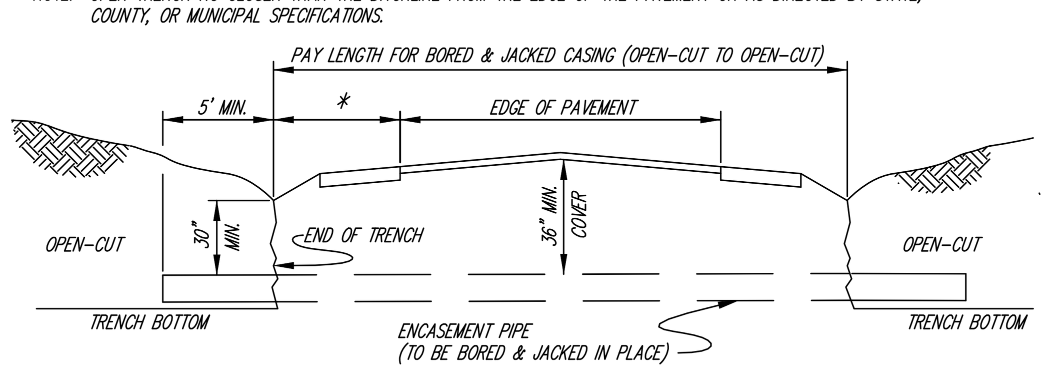

SECTION VIEW OF ROAD CROSSING

N.T.S. (WD3-06)

CLASS	P.S.I
A	4000
B	3000
C	2500
D	2000
E	NO 28 DAY STD

28 DAYS CONCRETE STRENGTH

(WD2-05)

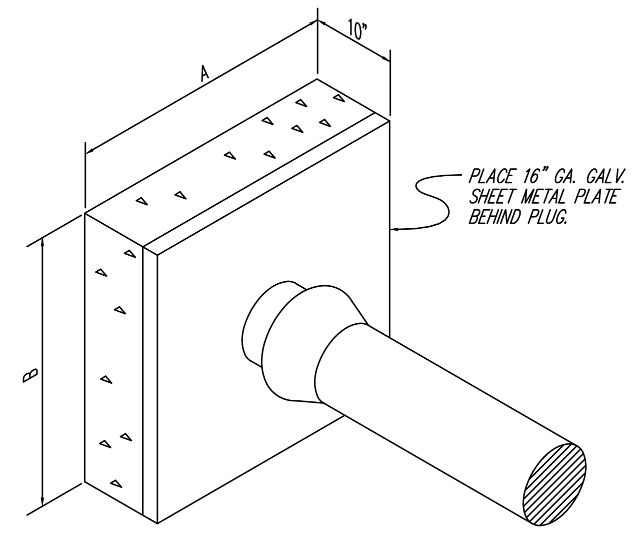

THRUST BLOCK FOR PLUGGED DEADEND LINE

N.T.S. (WD2-01)

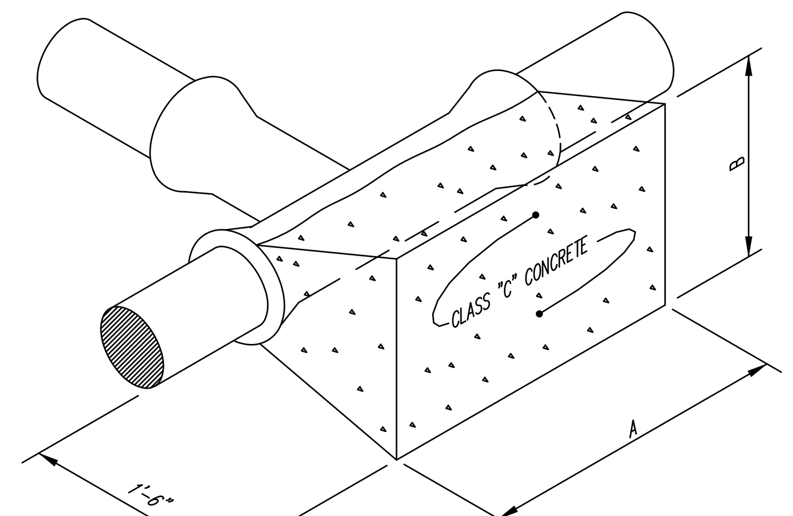

NOTE: ALL THRUST BLOCKS SHALL BE CONSTRUCTED OF CLASS "C" CONCRETE. NO EXTRA PAYMENT FOR THRUST BLOCKS. ALL COST TO BE INCLUDED IN UNIT PRICE BID FOR INSTALLING PIPE.

THRUST BLOCK FOR TEE

N.T.S. (WD2-02)

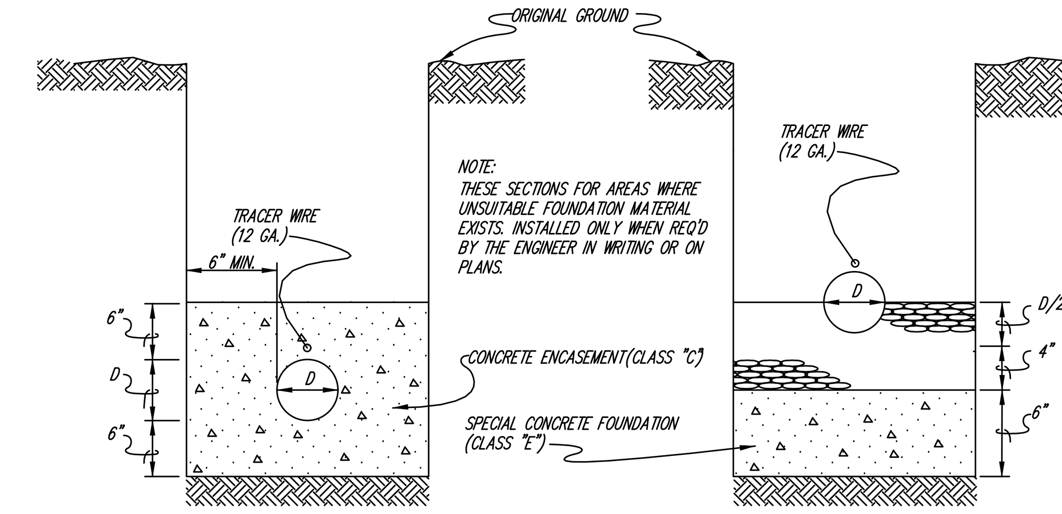

SPECIAL BEDDING FOR UNSTABLE FOUNDATIONS

(EXTRA PAY ITEM)

N.T.S. (WD1-07)

CARRIER PIPE NOMINAL SIZE	MINIMUM I.D. OF CASING PIPE FOR: PLASTIC B&S or COIL	C.I. or D.I. B&S	C.I. or D.I M.J.	A.B.S. CEM. or A.B.S.	MAX. SKID SUPPORT SPACING L.F. APART
3/4"	1-1/4"	———	———	———	———
1"&1-1/4"	2"	———	———	———	———
1-1/2"	3"	———	———	———	———
2"	3-1/2"	———	———	———	———
2-1/2"	4"	———	———	———	———
3"	5"	8"	10"	———	———
4"	8"	8"	10"	———	4.7"
5"	8"	———	———	———	5.5"
6"	10"	12"	12"	12"	6.3"
8"	12"	13-1/2"	15-1/2"	13-1/2"	7.4"
10"	15-1/2"	15-1/2"	17-1/2"	15-1/2"	8.5"
12"	17-1/2"	17-1/2"	19-1/2"	19-1/2"	9.6"
14"	———	19-1/2"	21-1/2"	21-1/2"	10.0"
16"	———	21-1/2"	23-1/2"	23-1/2"	11.0"
18"	———	25-1/2"	27-1/2"	27-1/2"	12.0"

WATERLINE CASING PIPE SCHEDULE

(WD2-06)

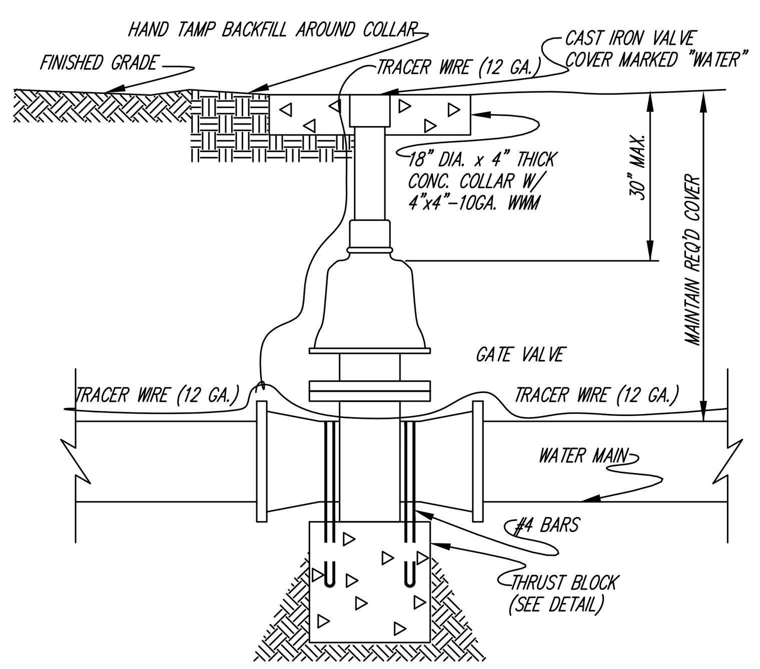

GATE VALVE SETTING

N.T.S. (GCW-02)

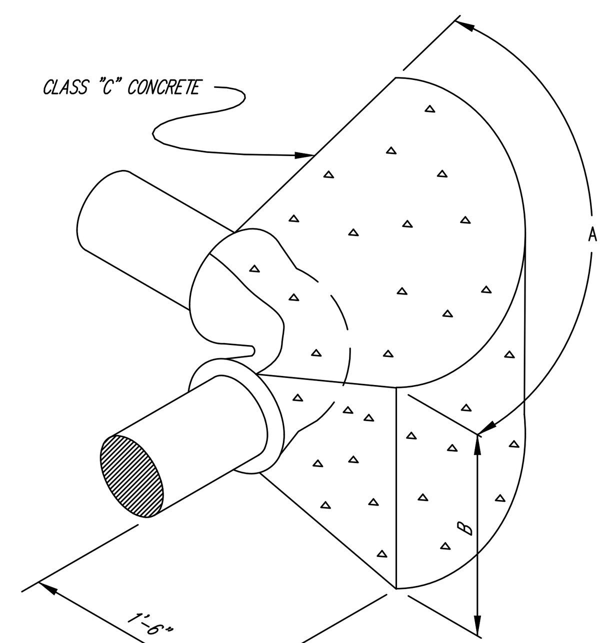

NOTE: 1"x4" STEEL STRAP ANCHORED WITH 1/2" ROD, ALL COATED W/ BITUMASTIC SHALL BE CONSIDER EQUAL TO A PAIR OF #4 BARS FOR USE W/ THRUST BLOCKS.

THRUST BLOCK FOR HORIZONTAL 90° BEND

N.T.S. (WD2-03)

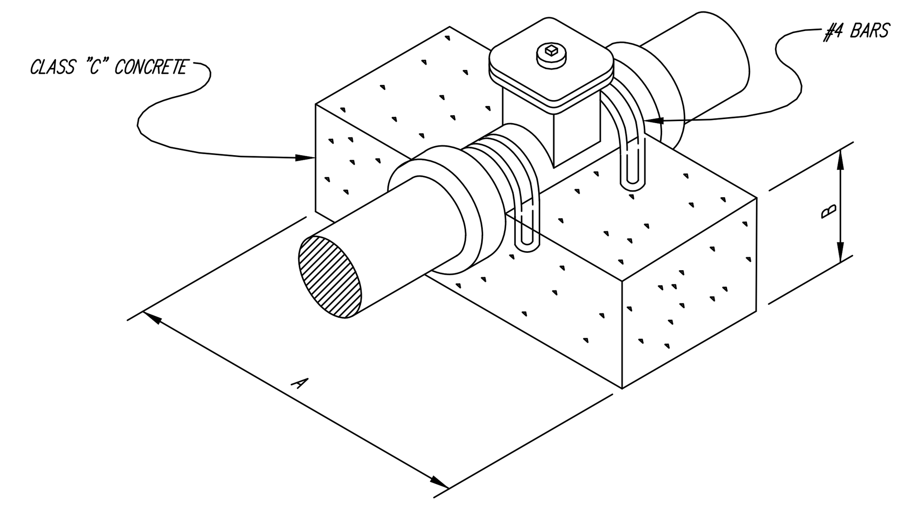

NOTE: APPLY KOPPERS BITUMASTIC #50 TO ALL BARS OR STRAPS USED W/ THRUST BLOCKS

THRUST BLOCK FOR GATE VALVE

N.T.S. (WD2-04)

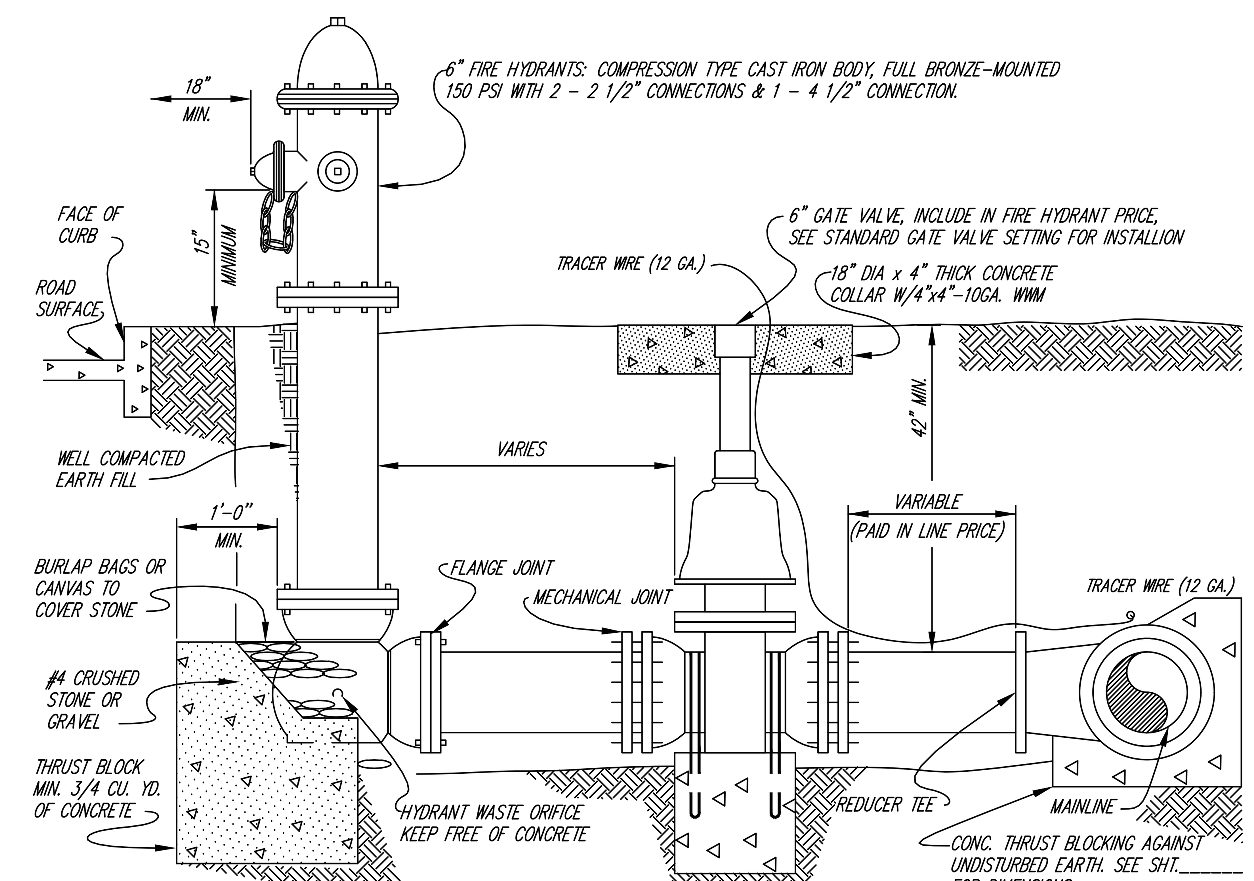

ELEVATION FIRE HYDRANT

N.T.S. (WD4-06)

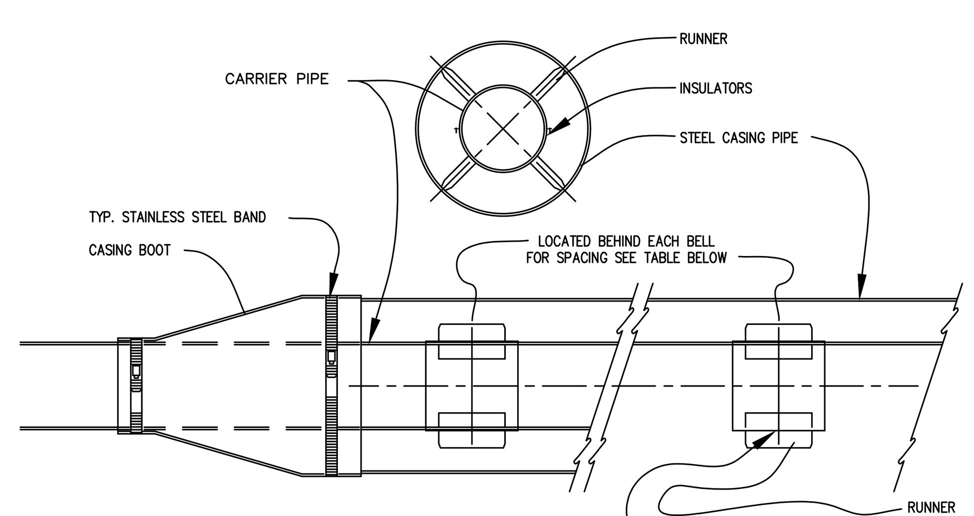

TYPICAL WATER LINE PIPE IN COVER PIPE INSTALLATION DETAIL

N.T.S. PS2-07

1. PIPELINE SPACERS PIPES INSTALLED INSIDE COVER PIPES SHALL BE CENTERED THROUGHOUT THE LENGTH OF COVER PIPE. CENTERING SHALL BE ACCOMPLISHED BY THE INSTALLATION OF POLYETHYLENE PIPELINE SPACERS ATTACHED TO THE PIPE IN SUCH MANNER AS TO PREVENT THE DISLODGMENT OF THE SPACERS AS THE CARRIER PIPE IS PULLED OR PUSHED THROUGH THE COVER PIPE. SPACERS SHALL BE OF SUCH DIMENSIONS TO PROVIDE (1) FULL SUPPORTIVE LOAD CAPACITY OF THE PIPE AND CONTENTS; (2) OF SUCH THICKNESS TO ALLOW INSTALLATION AND/OR REMOVAL OF THE PIPE; AND (3) TO ALLOW NO GREATER THAN 1/2 INCH MOVEMENT OF THE CARRIER PIPE WITHIN THE COVER PIPE AFTER CARRIER PIPE IS INSTALLED. SPACERS SHALL BE LOCATED IMMEDIATELY BEHIND EACH BELL AND AT A MAXIMUM SPACING DISTANCE AS FOLLOWS:

PIPELINE DIAMETER (IN.)	MAXIMUM SPACING (FT.)
4" - 8"	7'
10" - 24"	10'

2. END SEALS UPON COMPLETION OF INSTALLATION OF THE CARRIER PIPE, THE ANNULAR SPACE AT THE ENDS OF THE COVER PIPE SHALL BE SEALED TO PREVENT THE ENTRANCE OF GROUNDWATER, SILT, ETC., INTO THE COVER PIPE. THE SEAL SHALL BE A MANUFACTURED PRODUCT SPECIALLY MADE FOR THIS PURPOSE. THE SEAL SHALL BE CONSTRUCTED OF SYNTHETIC RUBBER WITH STAINLESS STEEL BANDING STRAPS.

SOFT-SANDY CLAY SOIL (BEARING STRENGTH = 2,000#/FT.²)												
PIPE SIZE	BEARING AREA 90° BEND		"B"	"A"	BEARING AREA 45° BEND		"B"	"A"	BEARING AREA TEE, GATE VALVE & DEADEND		"B"	"A"
1 1/2"	0.33	FT.²	12"	4"	0.18	FT.²	8"	4"	0.24	FT.²	9"	4"
2"	0.52	FT.²	12"	7"	0.28	FT.²	12"	4"	0.37	FT.²	12"	5"
2 1/2"	0.75	FT.²	12"	9"	0.41	FT.²	12"	5"	0.53	FT.²	12"	7"
3"	1.12	FT.²	18"	9"	0.61	FT.²	12"	8"	0.79	FT.²	18"	7"
4"	1.84	FT.²	24"	12"	1.00	FT.²	18"	8"	1.30	FT.²	24"	8"
6"	3.96	FT.²	36"	16"	2.14	FT.²	26"	12"	2.80	FT.²	30"	14"
8"	6.70	FT.²	54"	18"	3.63	FT.²	30"	18"	4.74	FT.²	36"	19"
10"	10.00	FT.²	60"	24"	5.41	FT.²	44"	18"	7.07	FT.²	43"	24"
12"	13.69	FT.²	60"	33"	7.41	FT.²	36"	30"	9.68	FT.²	47"	30"
14"	16.35	FT.²	66"	36"	9.35	FT.²	40"	34"	12.20	FT.²	60"	30"
16"	19.55	FT.²	72"	40"	11.35	FT.²	60"	28"	14.77	FT.²	60"	36"

I

THRUST BLOCKS (160 P.S.I. DESIGNED)

(WD2-08)

SOLID-SAND & GRAVEL CEMENTED W/CLAY (BEARING STRENGTH = 4,000 #/FT.²)												
PIPE SIZE	BEARING AREA 90° BEND		"B"	"A"	BEARING AREA 45° BEND		"B"	"A"	BEARING AREA TEE, GATE VALVE & DEADEND		"B"	"A"
1 1/2"	0.17	FT.²	6"	4"	0.90	FT.²	4"	4"	0.12	FT.²	5"	4"
2"	0.26	FT.²	10"	4"	0.14	FT.²	6"	4"	0.18	FT.²	7"	4"
2 1/2"	0.23	FT.²	12"	5"	0.20	FT.²	8"	4"	0.26	FT.²	10"	4"
3"	0.56	FT.²	12"	7"	0.30	FT.²	8"	6"	0.40	FT.²	10"	6"
4"	0.92	FT.²	18"	8"	0.50	FT.²	9"	8"	0.65	FT.²	12"	8"
6"	1.98	FT.²	24"	12"	1.07	FT.²	16"	10"	1.40	FT.²	18"	12"
8"	3.35	FT.²	42"	12"	1.82	FT.²	22"	12"	2.37	FT.²	29"	12"
10"	5.00	FT.²	40"	18"	2.71	FT.²	22"	18"	3.54	FT.²	29"	18"
12"	6.85	FT.²	42"	24"	3.71	FT.²	30"	18"	4.84	FT.²	30"	24"
14"	8.80	FT.²	43"	30"	4.67	FT.²	36"	19"	6.16	FT.²	36"	26"
16"	11.20	FT.²	62"	27"	5.66	FT.²	44"	19"	7.50	FT.²	36"	30"

II

THRUST BLOCKS (160 P.S.I. DESIGNED)

(WD2-09)

NOTE:WHERE THE WATERMAIN IS LOCATED IN A STREET OR ROAD, THE AIR RELEASE VALVE AND BOX ARE TO BE LOCATED OFF THE ROAD AS DIRECTED BY THE ENGINEER AND CONNECTED TO THE MAINLINE BY 3/4" SERVICE PIPE. THE SERVICE PIPE WILL BE A SEPERATE PAY ITEM.

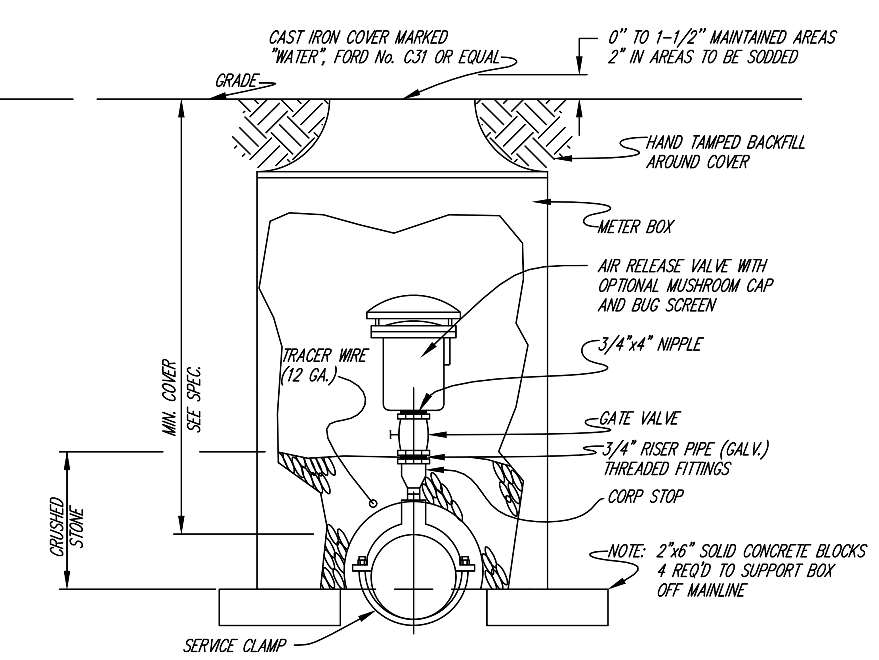

AIR RELEASE VALVES

N.T.S. (WD4-04)

GREEN RIVER COMMERCE PARK
WATER AND SEWER EXTENSIONS
ADAIR COUNTY, KENTUCKY

DATE	REVISION	BY

© COPYRIGHT

NOTICE: This document discloses subject matter considered confidential by MSE of Kentucky, Inc. and on which MSE of Kentucky, Inc. has property rights. Neither receipt nor possession thereof confers or transfers any rights to reproduce the document or any part thereof, or to disclose any information contained therein to others, or to use it for any purpose without the written permission of MSE of Kentucky, Inc.

PROJECT NO.	2060-13
DESIGNED BY	D.S.T.
DRAWN BY	J.R.M.
CHECKED BY	D.S.T.
REVIEWED BY	D.S.T.
DATE	FEBRUARY 2024
SCALE	AS NOTED

MSE OF KENTUCKY, INC.
Engineers Architects Planners
624 Wellington Way
Lexington, KY 40503
www.mselex.com
Phone: (859)223-5694
Fax: (859)223-2607

DRAWING NO.

WD-1

SHEET OF

PUMP SCHEDULE

PUMP STATION	GPM	T.D.H.	H.P.	R.P.M.	MINIMUM EFFICIENCY	POWER	TYPE
NO. 1	78	100	5	1740	50	230/460	SUBMERSIBLE PUMP

CONTROL POINT	ELEVATION (FT MSL)	VOLUME (GALLONS)	FILL TIME (MINUTES)
BOTTOM	868.8		
PUMPS OFF	870.3	564	7.2
LEAD	871.8	564	7.2
LAG	872.8	376	4.8
ALARM	873.8	376	4.8
TOP OF WETWELL	894	7971	102.2

NOTE:
STAINLESS STEEL JUNCTION BOX W/ INTEGRAL TERMINAL BOARD FOR PUMP CONNECTIONS AND FLOAT CONNECTIONS SHALL BE MOUNTED ON THE WETWELL. A STAINLESS STEEL CONTROL PANEL SHALL BE MOUNTED ON THE VALVE VAULT. PEDESTALS OF JUNCTION BOX AND VALVE VAULT SHALL BE OF STAINLESS STEEL WITH ADEQUATE ROOM FOR ALL CABLES AND CONNECTORS. PEDESTALS SHALL HAVE AN ACCESS PANEL SIZED TO ALLOW AMPLE ACCESS TO ALL CABLE CONNECTORS. "DO NOT PAINT."

NOTE:
ALL FASTENERS INCLUDING BOLTS, NUTS, OTHER METALS (EXCEPT PIPE), IN/ON WET WELL & VALVE VAULT TO BE STAINLESS STEEL.

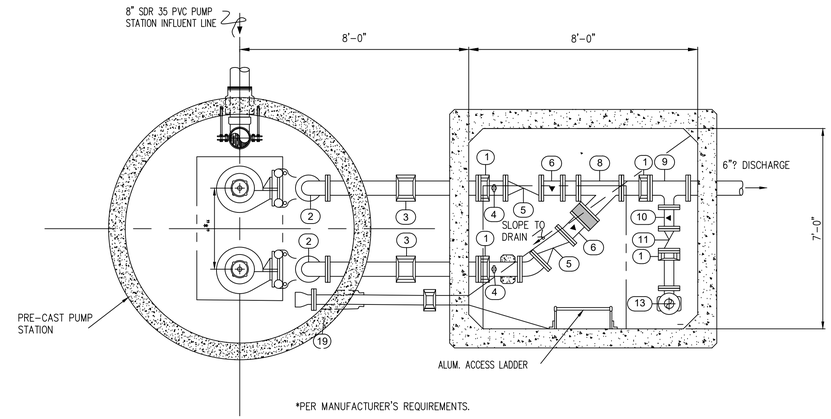

LOWER PLAN – PUMP STATION

SCALE: 1/2"=1'-0"

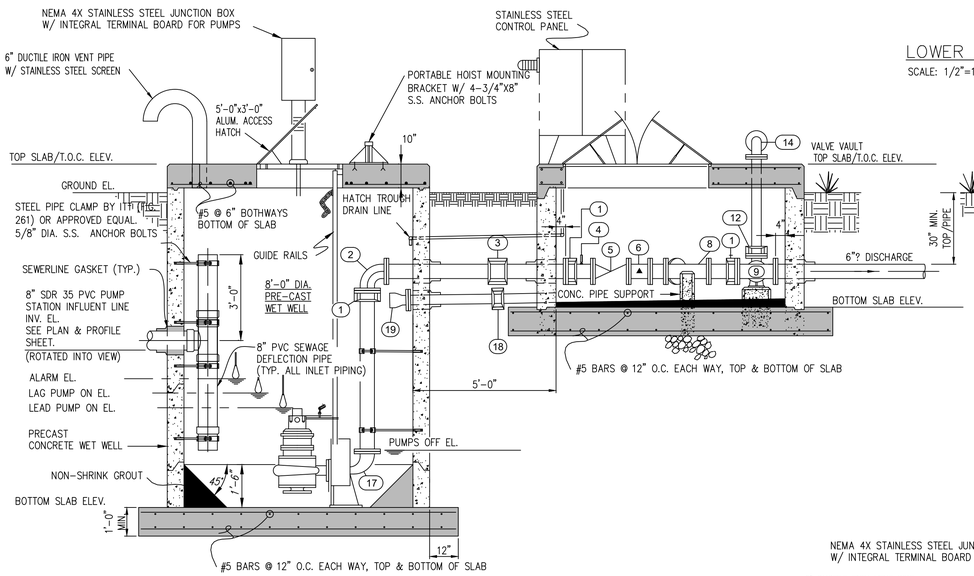

PUMP STATION SECTION

SCALE: 1/2"=1'-0"

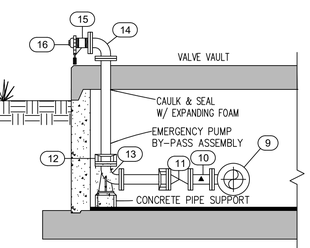

EMERGENCY BYPASS SECTION

N.T.S.

NOTE:
ALUM. ACCESS HATCH AND PORTABLE HOIST MOUNTING BRACKET, FOR PUMP REMOVABLE, SHALL BE LOCATED PER PUMP MANUFACTURE'S RECOMMENDATIONS.

NOTE:

1. TIE-IN TO PUMP STATION OPENINGS W/ RUBBER GASKETS & CLAMPS, TYPE PSX AS MANUFACTURED BY PRESS SEAL GASKET CO. OR EQUAL. PACK GASKET WITH NON-SHRINK GROUT & FINISH SUCH THAT GROUT IS FLUSH WITH INSIDE WALL OF WET WELL & VALVE VAULT. TYPICAL ALL OPENINGS.

2. CONTRACTOR SHALL CONFIRM ANGLE OF PIPE ENTRANCE TO PUMP STATION BEFORE ORDERING WET WELL SECTIONS.

3. LOCATE GUIDE RAILS, UPPER GUIDE BRACKET, CABLE HOLDER & ALUM. ACCESS HATCH AS REQUIRED BY PUMPS & EQUIPMENT DIMENSIONS.

4. COAT OUTSIDE OF WET WELL AND VALVE VAULT WITH BITUMINOUS WATER PROOFING AS PER MANHOLE STANDARD DETAIL. TWO BANDS OF CONSEAL ARE TO BE USED @ JOINTS AND JOINTS ARE TO BE GROUTED.

5. ALL PIPING SHOWN IN AND BETWEEN THE WET WELL AND VALVE VAULT ARE TO BE DUCTILE IRON PIPES, UNLESS SHOWN OTHERWISE.

6. PUMP STATION AND VALVE VAULT SHALL BE EQUIPED W/ APPROVED FLYGT SAFE-HATCH ACCESS COVER FOR FALL PROTECTION AS MANUFACTURED BY XYLEM OR APPROVED EQUAL.

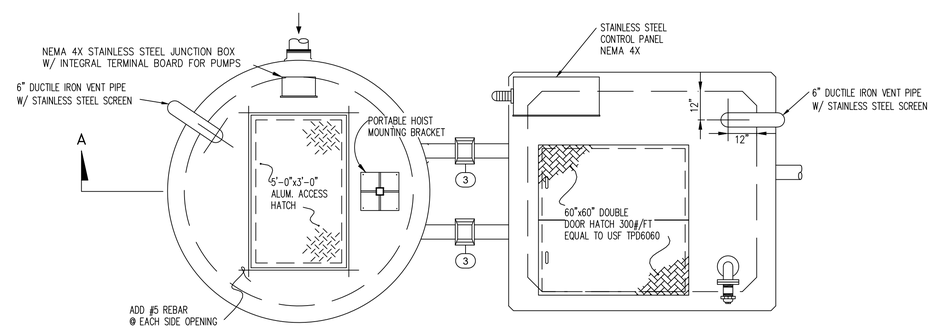

UPPER PLAN – PUMP STATION

SCALE: 1/2"=1'-0"

PLAN & DETAILS – PUMP STATION

GREEN RIVER COMMERCE PARK
WATER AND SEWER EXTENSIONS

ADAIR COUNTY, KENTUCKY

DATE	REVISION	BY

© copyright
NOTICE: This document discloses subject matter considered confidential by MSE of Kentucky, Inc. and on which MSE of Kentucky, Inc. claims protection as an unpublished work under the laws of the United States. No part thereof, nor its disclosure to others, may be copied, reproduced, distributed, or disclosed to others without the express permission of MSE of Kentucky, Inc.

PROJECT NO.	2060-13
DESIGNED BY	D.S.T.
DRAWN BY	J.R.M.
CHECKED BY	D.S.T.
REVIEWED BY	D.S.T.
DATE	FEBRUARY 2024
SCALE	AS NOTED

MSE OF KENTUCKY, INC.
Engineers
Architects
Planners
624 Wellington Way
Lexington, KY 40503
www.mseex.com
Phone: (859)223-5694
Fax: (859)223-2607

DRAWING NO.

SS-0

SHEET OF

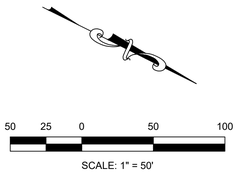

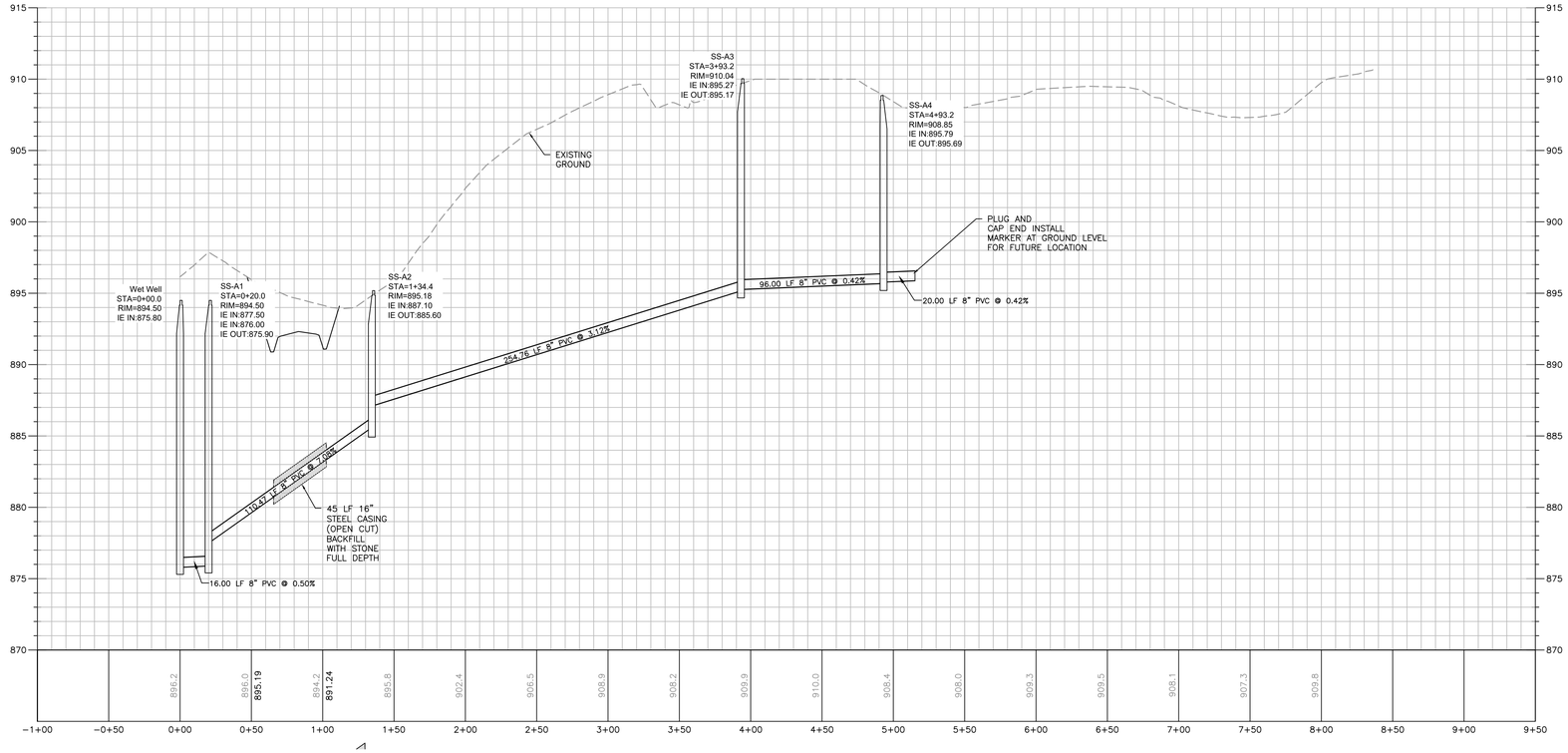

GREEN RIVER COMMERCE PARK

WATER AND SEWER EXTENSIONS

ADAIR COUNTY, KENTUCKY

DATE	REVISION	BY

© commcorr
NOTICE: This document discloses subject matter considered confidential by MSE of Kentucky, Inc. and on which MSE of Kentucky, Inc. claims proprietary rights. This document may not be reproduced, disclosed, or used in any other way than herein specifically permitted by the written permission of MSE of Kentucky, Inc.

PROJECT NO.	2060-13
DESIGNED BY	D.S.T.
DRAWN BY	J.R.M.
CHECKED BY	D.S.T.
REVIEWED BY	D.S.T.
DATE	FEBRUARY 2024
SCALE	AS NOTED

MSE OF KENTUCKY, INC.
Engineers
Architects
Planners
624 Wellington Way
Lexington, KY 40503
www.mseiex.com
Phone: (859)223-5694
Fax: (859)223-2607

DRAWING NO.

SS-1

SHEET OF

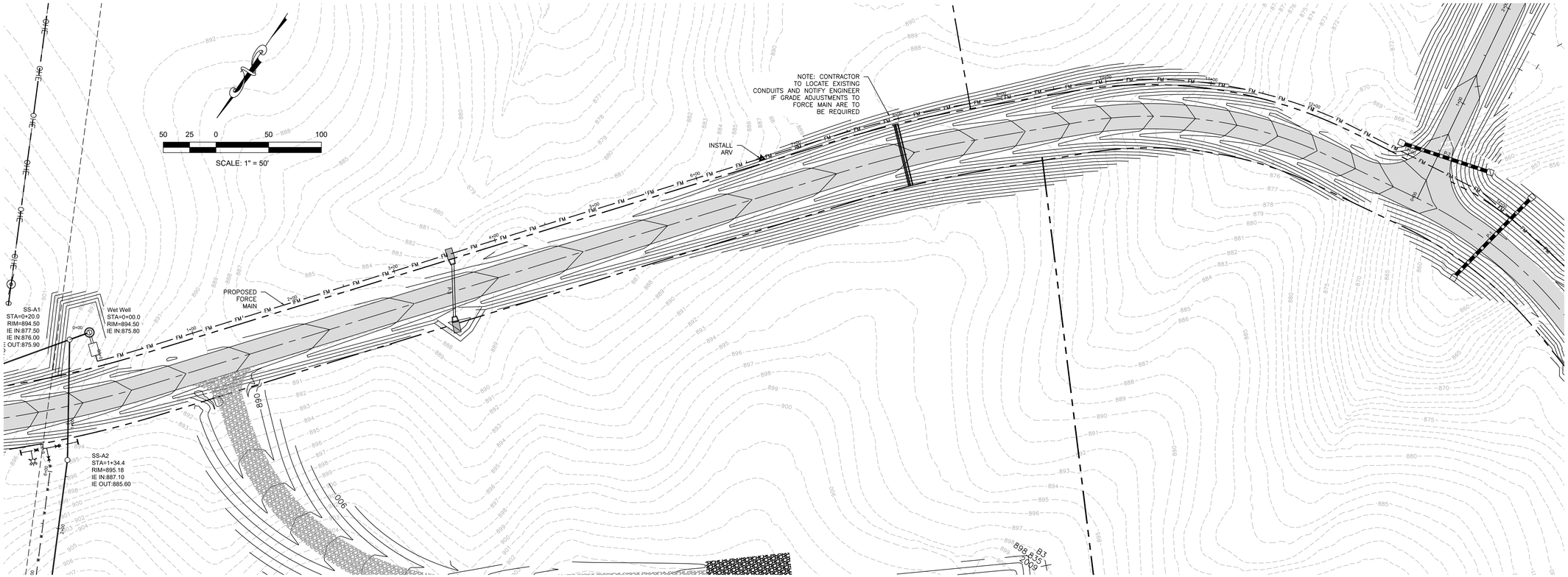

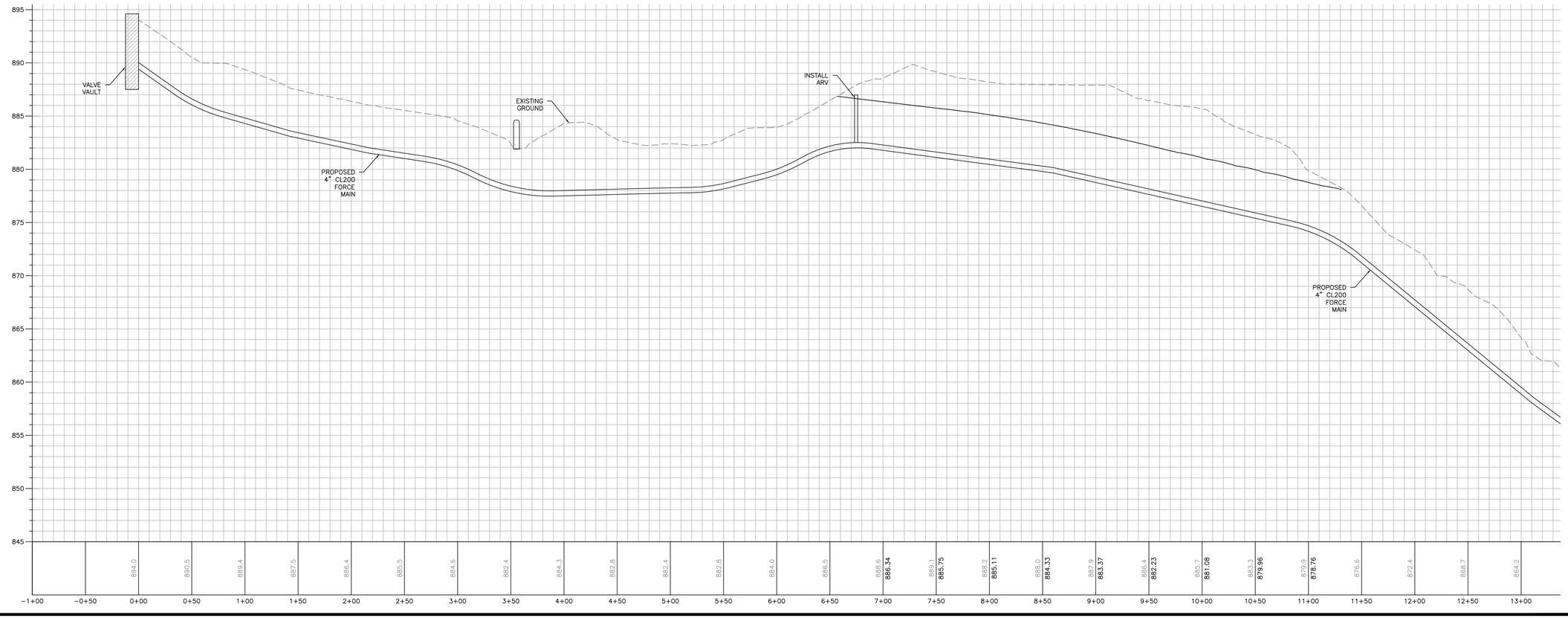

GREEN RIVER COMMERCE PARK
WATER AND SEWER EXTENSIONS

ADAIR COUNTY, KENTUCKY

DATE	REVISION	BY

© copyright
NOTICE: This document devises subject matter considered confidential by MSE of Kentucky, Inc. and on file at its principal office. Unauthorized use of this document in whole or in part, manual, or in electronic, contractual transfer or other, is prohibited without the express written permission of MSE of Kentucky, Inc.

PROJECT NO.	2060-13
DESIGNED BY	D.S.T.
DRAWN BY	J.R.M.
CHECKED BY	D.S.T.
REVIEWED BY	D.S.T.
DATE	FEBRUARY 2024
SCALE	AS NOTED

MSE OF KENTUCKY, INC.
Engineers
Architects
Planners
624 Wellington Way
Lexington, KY 40503
www.mselex.com
Phone: (859)223-5694
Fax: (859)223-2607

DRAWING NO.

SS-FM1

SHEET OF

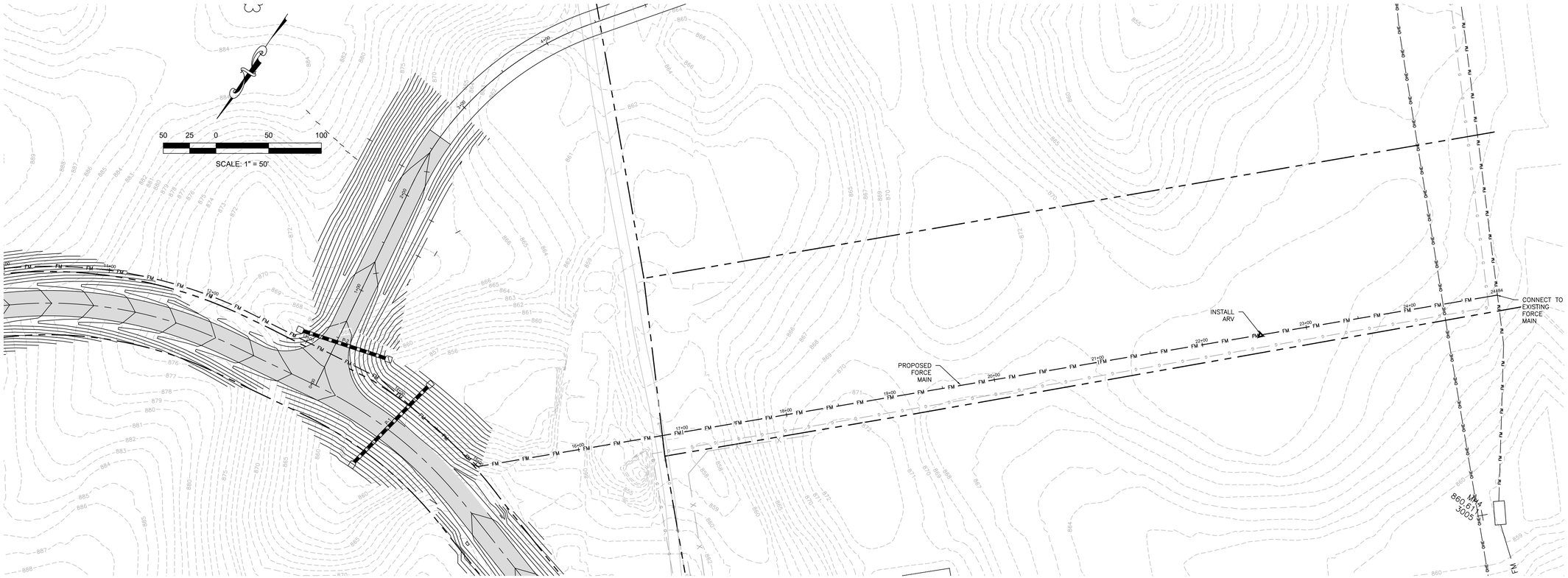

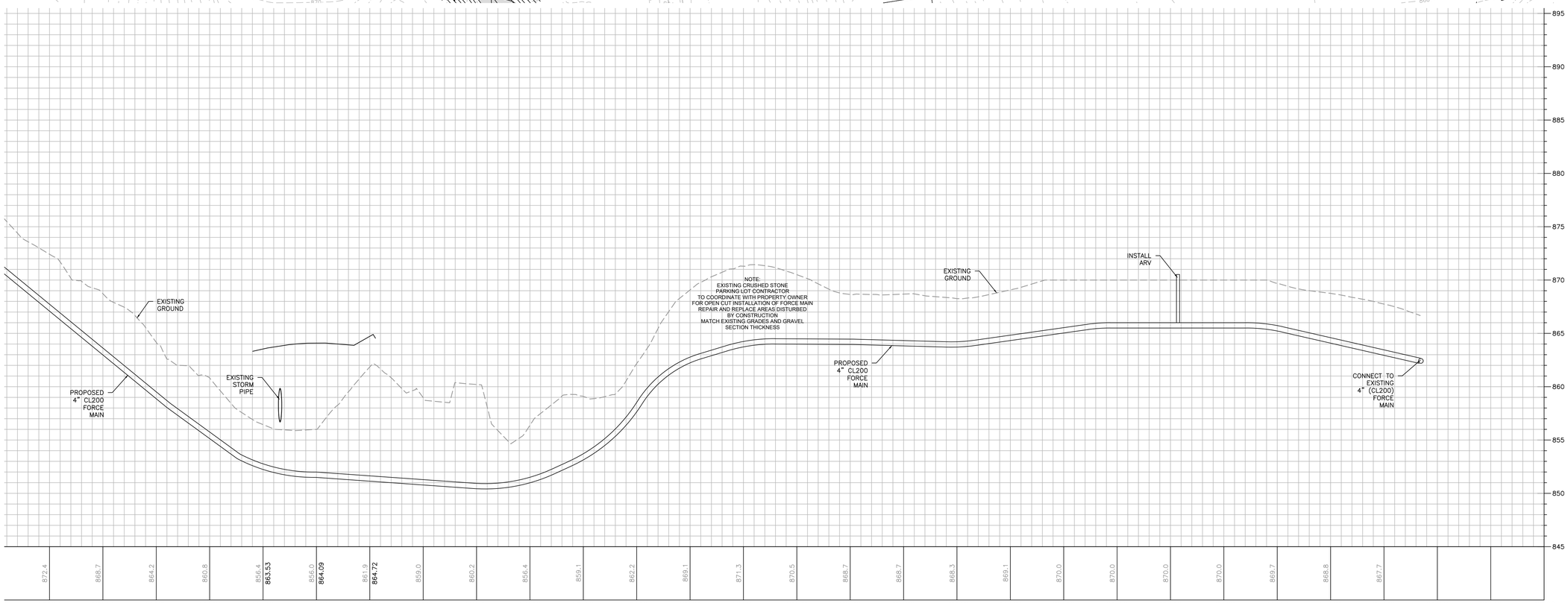

GREEN RIVER COMMERCE PARK
WATER AND SEWER EXTENSIONS

ADAIR COUNTY, KENTUCKY

DATE	REVISION	BY

© cornerstone

NOTICE: The document discloses subject matter considered confidential by MSE of Kentucky, Inc. and on which rights of ownership and protection are claimed. Recipient agrees to hold this document in confidence and not to copy, disclose, or distribute to others any part thereof, or to use for any purpose except the purpose for which it was furnished by MSE of Kentucky, Inc.

PROJECT NO.	2060-13
DESIGNED BY	D.S.T.
DRAWN BY	J.R.M.
CHECKED BY	D.S.T.
REVIEWED BY	D.S.T.
DATE	FEBRUARY 2024
SCALE	AS NOTED

MSE OF KENTUCKY, INC.
Engineers
Architects
Planners
624 Wellington Way
Lexington, KY 40503
www.mseinc.com
Phone: (859)223-5694
Fax: (859)223-2607

DRAWING NO.

SS-FM2

SHEET OF

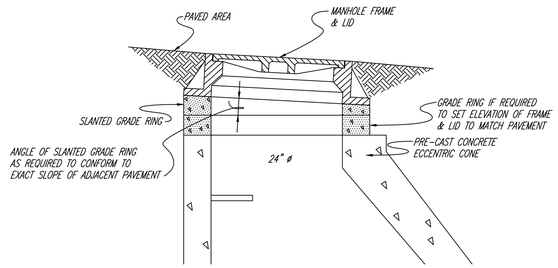

NOTE: INSTALL SEALING COMPOUND IN ALL JOINTS TO INCLUDE BENEATH FRAME.

DETAIL – GRADE RINGS

N.T.S. (GCS-05)

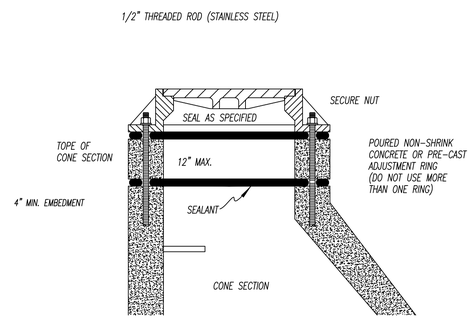

DETAIL: SANITARY SEWER INSTALLATION DETAIL FOR ALL FRAMES AND COVERS

N.T.S.

NOTE:
MIN. WT. LID ~ 150 lbs.
MIN. WT. LID/FRAME ASSY. ~ 385 lbs.
ALL STEEL ASTM A-48 W/ MACHINED SEATING EDGES

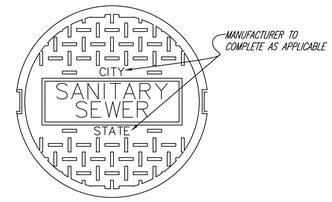

PLAN – LID

N.T.S.

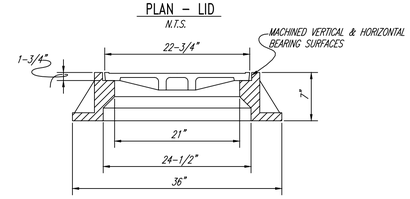

SECTION – MANHOLE & LID

N.T.S. (GCS-06)

GASKET: THICKNESS OF GASKET MATERIAL .375
TENSILE STRENGTH OF RUBBER 1800 PSI MIN.
ELONGATION OF RUBBER 450% – 550%
DUROMETER OF RUBBER 42 ±5

ALL RUBBER MEETS ASTM C-923 REQUIREMENTS.

POWER EXPANSION SLEEVE: 1.5" X .120" TYPE 304 STAINLESS STEEL
TENSILE STRENGTH OF STEEL 85,000 PSI
YIELD STRENGTH OF STEEL 35,000 PSI

POWER EXPANSION SLEEVE STAINLESS STEEL MEETS ALL REQUIREMENTS OF ASTM C-923

TAKE-UP CLAMP: BAND, SADDLE AND HOUSING MADE OF TYPE 302 STAINLESS STEEL
BREEZE CLAMP. SCREW MADE OF TYPE 305 STAINLESS STEEL.

BREEZE STAINLESS STEEL CLAMPS MEET ASTM C-923 REQUIREMENTS.

GASKET MANUFACTURED BY PRESS SEAL GASKET CO.

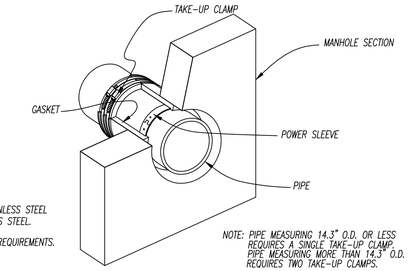

NOTE: PIPE MEASURING 14.3" O.D. OR LESS REQUIRES A SINGLE TAKE-UP CLAMP. PIPE MEASURING MORE THAN 14.3" O.D. REQUIRES TWO TAKE-UP CLAMPS.

FORCE MAIN/MANHOLE TIE-IN

NTS DET22

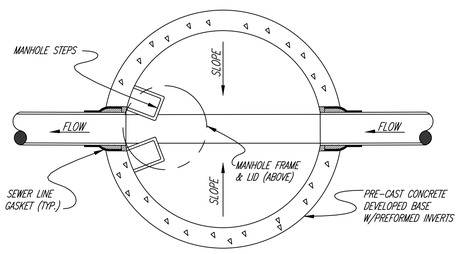

PLAN

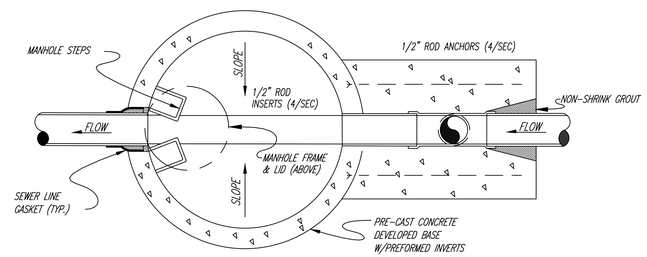

PLAN

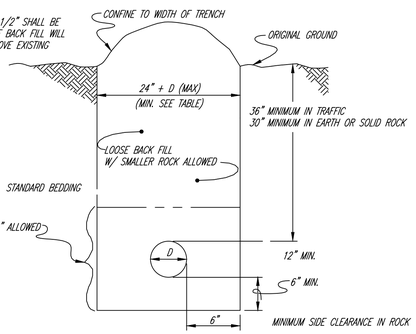

TRENCH WIDTH & DEPTH

N.T.S. (PS1-04)

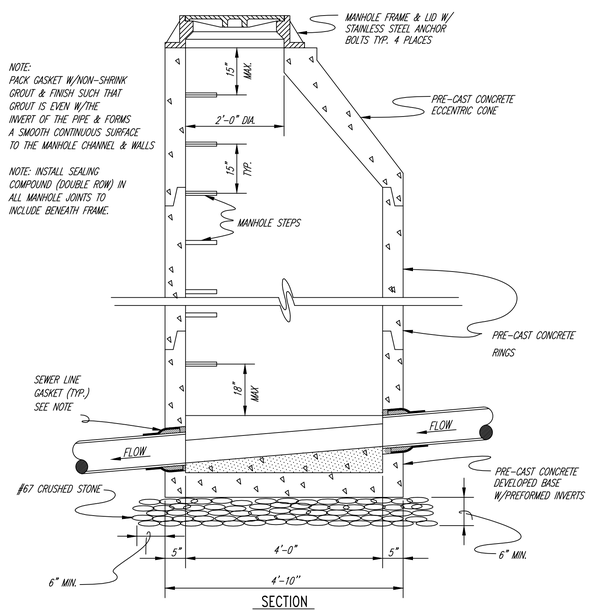

NOTE:
PACK GASKET W/NON-SHRINK GROUT & FINISH SUCH THAT GROUT IS EVEN W/THE INVERT OF THE PIPE & FORMS A SMOOTH CONTINUOUS SURFACE TO THE MANHOLE CHANNEL & WALLS

NOTE: INSTALL SEALING COMPOUND (DOUBLE ROW) IN ALL MANHOLE JOINTS TO INCLUDE BENEATH FRAME.

SECTION

TYPICAL MANHOLE

N.T.S. (GCS-02)

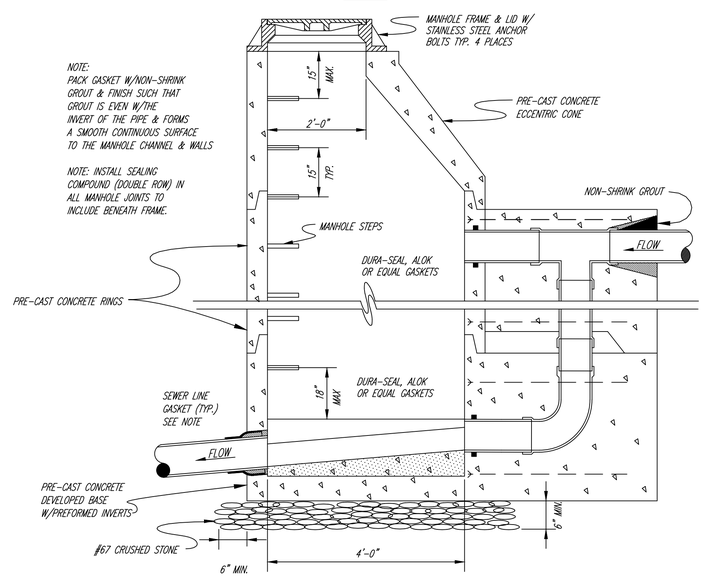

NOTE:
PACK GASKET W/NON-SHRINK GROUT & FINISH SUCH THAT GROUT IS EVEN W/THE INVERT OF THE PIPE & FORMS A SMOOTH CONTINUOUS SURFACE TO THE MANHOLE CHANNEL & WALLS

NOTE: INSTALL SEALING COMPOUND (DOUBLE ROW) IN ALL MANHOLE JOINTS TO INCLUDE BENEATH FRAME.

SECTION

TYPICAL DROP-MANHOLE

N.T.S. (GCS-03)

STANDARD SEWER DETAILS

GREEN RIVER COMMERCE PARK
WATER AND SEWER EXTENSIONS

ADAIR COUNTY, KENTUCKY

DATE	REVISION	BY

© commset
NOTICE: This document discloses subject matter considered confidential by MSE of Kentucky, Inc. and on which MSE of Kentucky, Inc. claims proprietary rights. This document may not be reproduced, disclosed, or used in any other way that may be prejudicial to the proprietary rights of MSE of Kentucky, Inc. without the express written permission of MSE of Kentucky, Inc.

PROJECT NO. 2060-13
DESIGNED BY D.S.T.
DRAWN BY J.R.M.
CHECKED BY D.S.T.
REVIEWED BY D.S.T.
DATE FEBRUARY 2024
SCALE AS NOTED

MSE OF KENTUCKY, INC.
Engineers
Architects
Planners
624 Wellington Way
Lexington, KY 40503
www.mseiex.com
Phone: (859)223-5694
Fax: (859)223-2607

DRAWING NO.
SD-1
SHEET OF

SOFT-SANDY CLAY SOIL (BEARING STRENGTH = 2,000#/FT.²)										
PIPE SIZE	BEARING AREA 90° BEND	"B"	"A"	BEARING AREA 45° BEND	"B"	"A"	BEARING AREA TEE, GATE VALVE & DEAD END	"B"	"A"
1 1/2"	0.33 FT.²	12"	4"	0.18 FT.²	8"	4"	0.24 FT.²	9"	4"
2"	0.52 FT.²	12"	7"	0.28 FT.²	12"	4"	0.37 FT.²	12"	5"
2 1/2"	0.75 FT.²	12"	9"	0.41 FT.²	12"	5"	0.53 FT.²	12"	7"
3"	1.12 FT.²	18"	9"	0.61 FT.²	12"	8"	0.79 FT.²	18"	7"
4"	1.84 FT.²	24"	12"	1.00 FT.²	18"	8"	1.30 FT.²	24"	8"
6"	3.96 FT.²	36"	16"	2.14 FT.²	26"	12"	2.80 FT.²	30"	14"
8"	6.70 FT.²	54"	18"	3.63 FT.²	30"	18"	4.74 FT.²	36"	19"
10"	10.00 FT.²	60"	24"	5.41 FT.²	44"	18"	7.07 FT.²	43"	24"
12"	13.69 FT.²	60"	33"	7.41 FT.²	36"	30"	9.68 FT.²	47"	30"
14"	16.35 FT.²	66"	36"	9.35 FT.²	40"	34"	12.20 FT.²	60"	30"
16"	19.55 FT.²	72"	40"	11.35 FT.²	60"	28"	14.77 FT.²	60"	36"

THRUST BLOCKS (160 P.S.I. DESIGNED)

(W22-08)

NOTE: UNDER ROAD CROSSINGS STEEL CASING PIPE SHALL BE REQUIRED, PIPES 4" & LESS SHALL BE NEW SCHEDULE 40, PIPES LARGER THAN 4" SHALL HAVE MINIMUM WALL THICKNESS OF 0.250". ALL BORED & JACKED ENCASEMENT PIPE SHALL BE INSTALLED IN BORE HOLES NO LARGER THAN THE OUTSIDE DIAMETER OF THE ENCASEMENT PIPE.

NOTE: ALL JOINTS TO BE SOLIDLY WELDED, END OF CASING TO BE SEALED W/CONCRETE AFTER LINE HAS BEEN INSTALLED & TESTED.

* NOTE: OPEN TRENCH NO CLOSER THAN THE DITCH LINE FROM THE EDGE OF PAVEMENT.

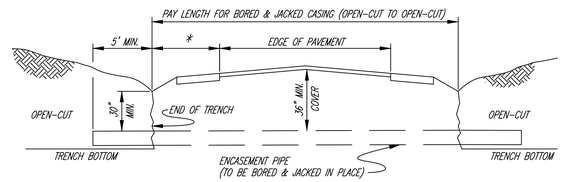

SECTION VIEW OF ROAD CROSSING

N.T.S. PS2-06

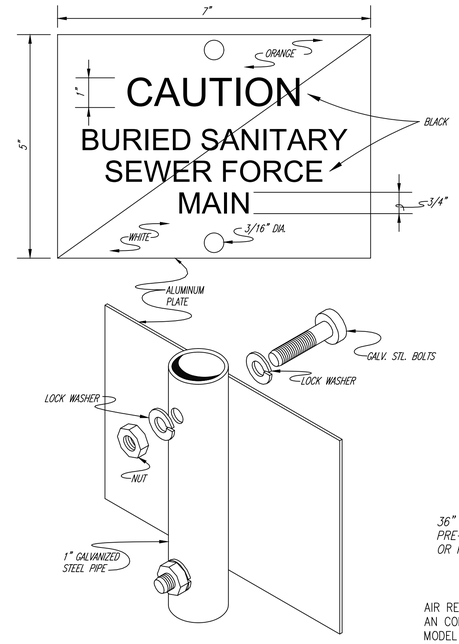

FORCE MAIN MARKER

N.T.S. (MSD-10)

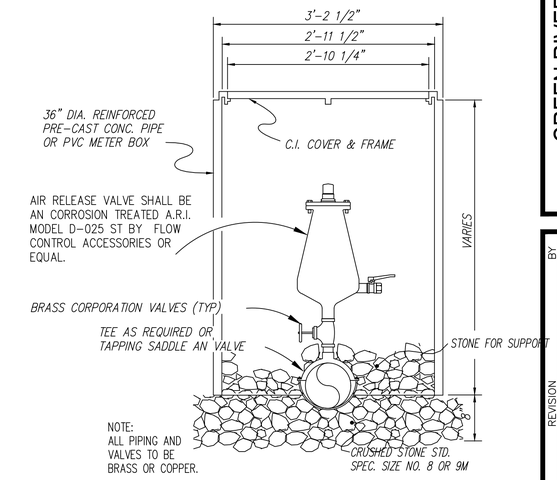

AIR RELEASE AND VACUUM RELEASE VALVE AND BOX DETAIL

N.T.S. MSD-01

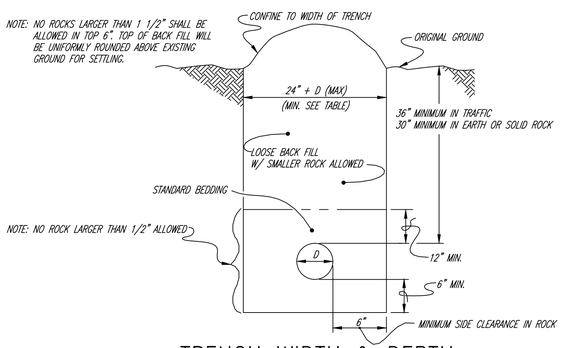

TRENCH WIDTH & DEPTH

N.T.S. (PS1-04)

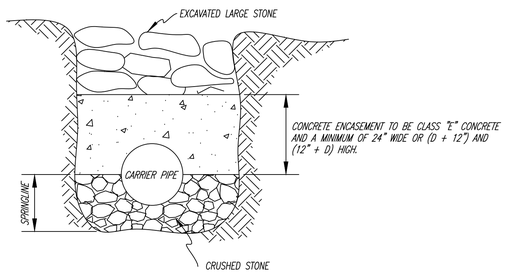

SPECIAL CREEK CROSSING TYPE "B" IN LOSE ROCK

N.T.S.

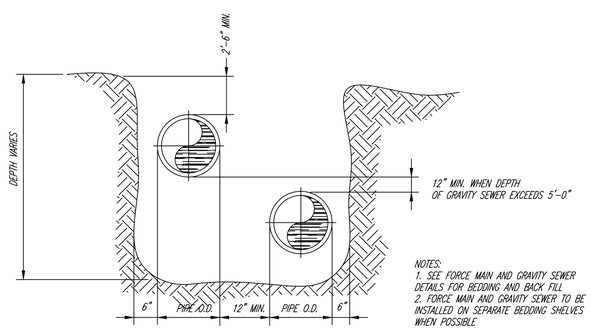

NOTES:
1. SEE FORCE MAIN AND GRAVITY SEWER DETAILS FOR BEDDING AND BACK FILL
2. FORCE MAIN AND GRAVITY SEWER TO BE INSTALLED ON SEPARATE BEDDING SHELVES WHEN POSSIBLE

COMBINED TRENCH

N.T.S.

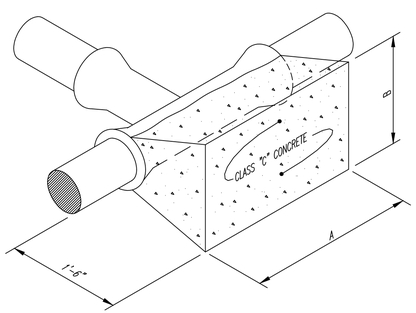

NOTE: ALL THRUST BLOCKS SHALL BE CONSTRUCTED OF CLASS "C" CONCRETE.

THRUST BLOCK FOR TEE

N.T.S. (GCM-07)

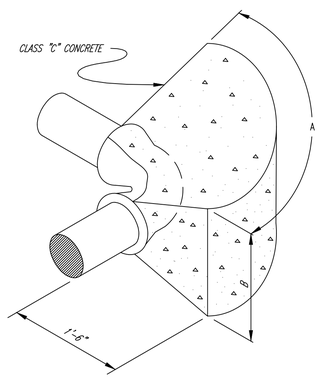

NOTE: 1"x4" STEEL STRAP ANCHORED WITH 1/2" ROD, ALL COATED W/ BITUMASTIC SHALL BE CONSIDER EQUAL TO A PAIR OF #4 BARS FOR USE W/ THRUST BLOCKS.

THRUST BLOCK FOR HORIZONTAL 90° BEND

N.T.S. (GCM-08)

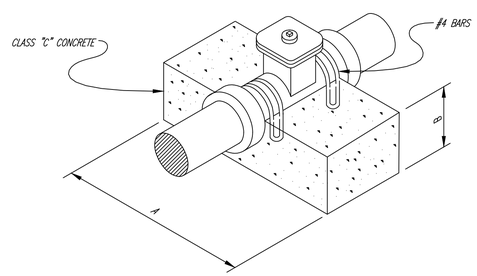

NOTE: APPLY KOPPERS BITUMASTIC #50 TO ALL BARS OR STRAPS USED W/ THRUST BLOCKS

THRUST BLOCK FOR GATE VALVE

N.T.S. (GCM-09)

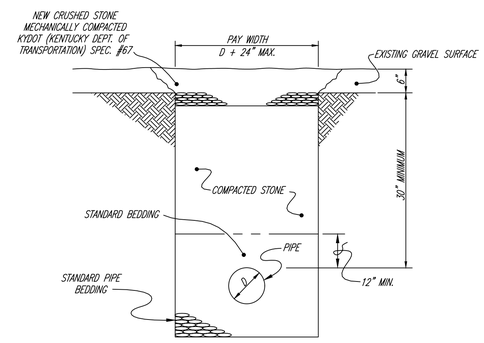

GRAVEL SURFACE

N.T.S. (PS1-06)

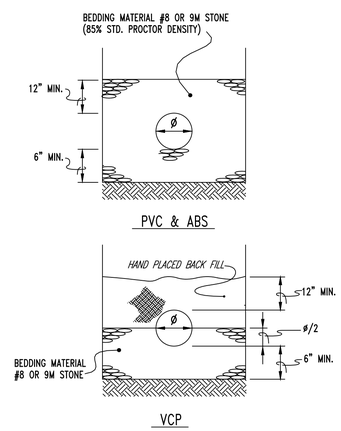

TRENCHING, BEDDING, & BACK FILL DETAILS

N.T.S. (GCS-10)

GREEN RIVER COMMERCE PARK
WATER AND SEWER EXTENSIONS

ADAIR COUNTY, KENTUCKY

DATE	REVISION	BY

© copyright
NOTICE: This document disclosure subject matter considered confidential by MSE of Kentucky, Inc. and on file at the office of MSE of Kentucky, Inc. This document shall not be reproduced, in whole or in part, nor disclosed to others in any manner without the written permission of MSE of Kentucky, Inc.

PROJECT NO.	2060-13
DESIGNED BY	D.S.T.
DRAWN BY	J.R.M.
CHECKED BY	D.S.T.
REVIEWED BY	D.S.T.
DATE	FEBRUARY 2024
SCALE	AS NOTED

MSE OF KENTUCKY, INC.
Engineers
Architects
Planners
624 Wellington Way
Lexington, KY 40503
www.mseinc.com
Phone: (859)223-5694
Fax: (859)223-2607

DRAWING NO.

SD-2

SHEET OF

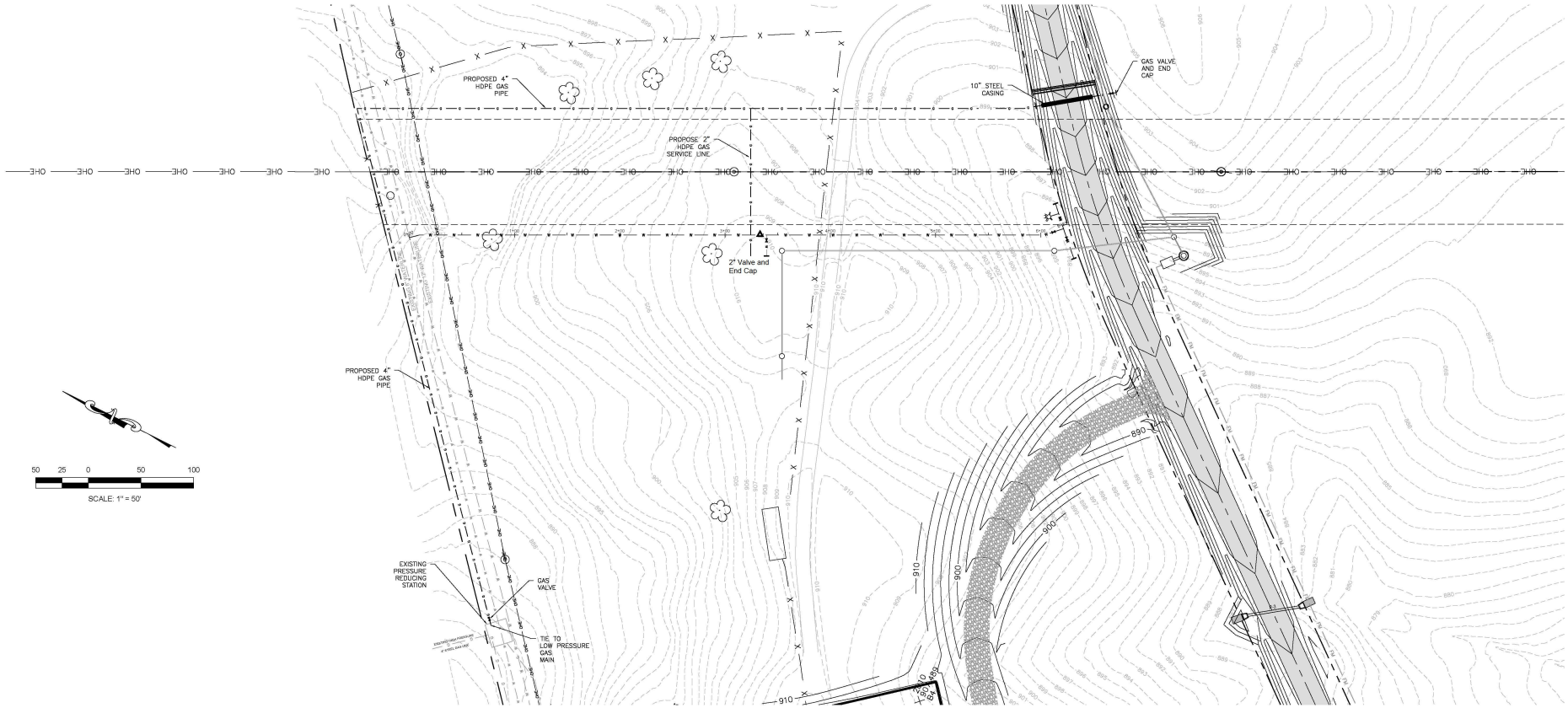

GREEN RIVER COMMERCE PARK

UTILITY EXTENSIONS

ADAIR COUNTY, KENTUCKY

DATE	REVISION	BY

© COPYRIGHT
WORKS, TO BE RENDERED, PRODUCED UNDER THIS CONTRACT WILL BE ARE & SHALL BE, AS FAR AS THE CONTRACTOR IS CONCERNED, THE PROPERTY OF MSE OF KENTUCKY, INC. & MAY NOT BE REPRODUCED OR USED FOR ANY OTHER PURPOSE WITHOUT THE WRITTEN PERMISSION OF MSE OF KENTUCKY, INC.

PROJECT NO.	2060-13
DESIGNED BY	D.S.T.
DRAWN BY	J.R.M.
CHECKED BY	D.S.T.
REVIEWED BY	D.S.T.
DATE	FEBRUARY 2024
SCALE	AS NOTED

MSE OF KENTUCKY, INC.
Engineers
Architects
Planners
824 Wallington Way
Lexington, KY 40503
www.mseinc.com
Phone: (859)223-9604
Fax: (859)223-2807

DRAWING NO.

G-1

SHEET OF

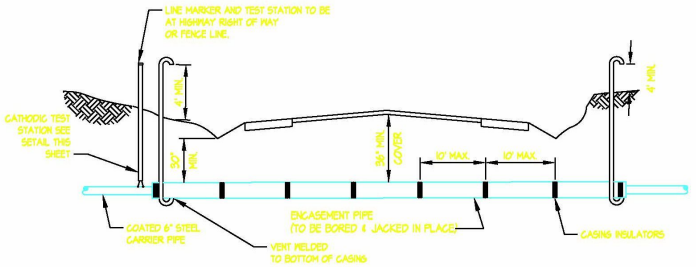

SECTION VIEW OF ROAD CROSSING WITH CASING

N.T.S.

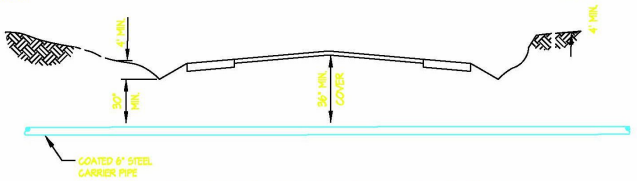

SECTION VIEW OF ROAD CROSSING BORE WITHOUT CASING OR OPEN CUT

N.T.S.

GENERAL NOTES:

1. PLACE 1/2" WIDE PREMOULDED EXPANSION JOINT FILLER MATERIAL AT INTERVALS NOT TO EXCEED 3 CONTROL JOINTS.
2. PLACE PREMOULDED EXPANSION JOINT FILLER MATERIAL BETWEEN SIDEWALKS AND STREET CURBS AND ANY OTHER RIGID STRUCTURES.
3. PLACE CONTROL JOINTS IN THE SIDEWALKS TO FORM A SQUARE. JOINTS MAY BE TOOLED OR SAWED AND SHALL EXTEND AT LEAST 1/3 OF THE DEPTH OF CONCRETE.
4. SIDEWALKS AND SIDEWALK RAMPS SHALL BE COMPLIANT WITH AMERICANS WITH DISABILITIES ACT (ADAAG) AND NEW MEXICO DOT STANDARD DRAWINGS, SECTION 608.

ROAD CROSSING DETAIL

SCALE: NONE

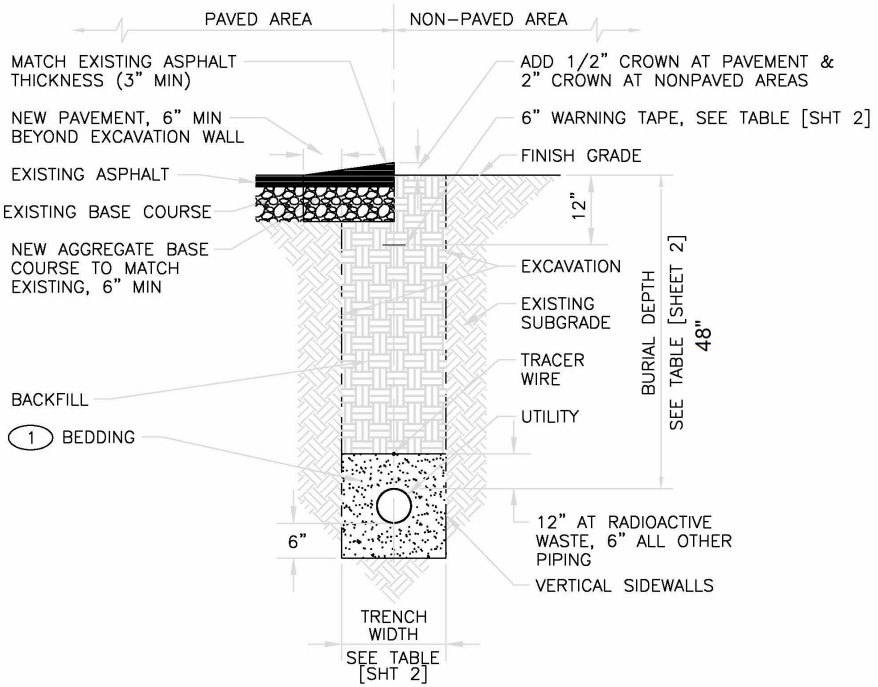

TRENCH DETAIL

SCALE: NONE

STANDARD GAS DETAILS

DATE	REVISION	BY
12/14/07	DELETED THRUST BLOCK DETAIL - DST	DMP

PROJECT NO.	4109-40
FILE NAME	OG2GD-1.dwg
DESIGNED BY	
DRAWN BY	
CHECKED BY	
REVIEWED BY	
DATE	AUGUST, 2007
SCALE	NTS

© MSE-HDR INC. THIS DOCUMENT, PLANS, SPECIFICATIONS, REPORTS, OR OTHER INSTRUMENTS OF SERVICE IS THE PROPERTY OF MSE-HDR INC. AND MAY NOT BE REPRODUCED OR USED WITHOUT WRITTEN CONSENT.

MSE OF KENTUCKY, INC.
Engineers
Architects
Planners
624 Wallington Way
Lexington, KY 40503
www.mselex.com
PHONE: (859)223-5694
FAX: (859)223-2607

DRAWING NO.

GD-1

SHEET OF

TITLEC.DWG

NOTES:

1) TRACER WIRE, STOCK ITEM #45-7500, TO BE INSTALLED PER THE GAS CONSTRUCTION SPECIFICATIONS.
2) ALL WIRE SPLICES TO BE MADE USING A SPLIT BOLT CONNECTOR WRAPPED WITH AQUA-SEAL AND ELECTRICAL TAPE.

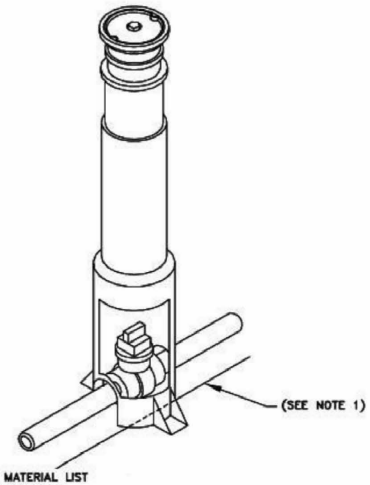

4" VALVE MATERIAL LIST

QTY.	DESCRIPTION
1.0	VALVE 4" PE3408
1.0	BOX 3" & 4" PE VALVES TRAFFIC RATED H-20

2" VALVE MATERIAL LIST

QTY.	DESCRIPTION
1.0	VALVE 2" PE3408
1.0	BOX 1-1/4" AND 2" PE VALVES TRAFFIC RATED H-20

GAS VALVE DETAIL

SCALE: NONE

NOTES:

1) TRACER WIRE, STOCK ITEM #45-7500, TO BE INSTALLED PER THE GAS CONSTRUCTION SPECIFICATIONS.
2) ALL WIRE SPLICES TO BE MADE USING A SPLIT BOLT CONNECTOR WRAPPED WITH AQUA-SEAL AND ELECTRICAL TAPE.

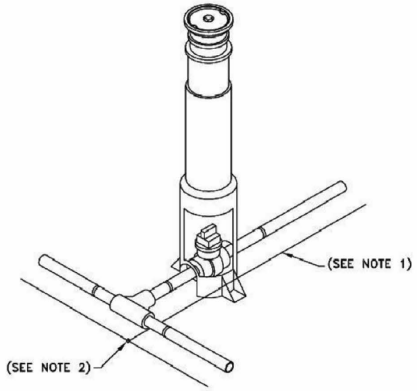

4" VALVE MATERIAL LIST

QTY.	DESCRIPTION
1.0	TEE 4" IPS BUTT FUSION PE3408
1.0	VALVE 4" PE3408
1.0	BOX 3" & 4" PE VALVES TRAFFIC RATED H-20
1.0	CONN SPLIT BOLT COPPER MAX #10 STR

2" VALVE MATERIAL LIST

QTY.	DESCRIPTION
1.0	TEE 4" IPS BUTT FUSION PE3408
1.0	REDUCER 4" X 2" IPS BUTT FUSION PE3408
1.0	VALVE 2" PE3408
1.0	BOX 1-1/4" AND 2" PE VALVES TRAFFIC RATED H-20
1.0	CONN SPLIT BOLT COPPER MAX #10 STR

4" x 4" & 4" x 2" BRANCH CONNECTION DETAIL

SCALE: NONE

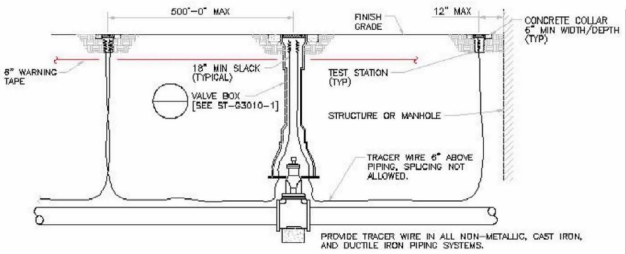

TRACER WIRE DETAIL

SCALE: NONE

2" MATERIAL LIST

QTY.	DESCRIPTION
1.0	TEE TAP PLEXCO 2" X 3/4" PE3408 BUTT FUSION
1.0	CAP 3/4" PE3408 BUTT FUSION
1.0	CAP 2" IPS BUTT FUSION PE3408
1.0	RISER GAS 3/4"
1.0	COCK GAS METER 3/4"
1.0	ANODE MAGNESIUM 3 LB. WITH COVERING
1.0	CONN SPLIT/BOLT COPPER MAX #10 STR

4" MATERIAL LIST

QTY.	DESCRIPTION
1.0	TEE TAP PLEXCO 4" X 3/4" PE3408 BUTT FUSION
1.0	CAP 3/4" PE3408 BUTT FUSION
1.0	CAP 4" IPS BUTT FUSION PE3408
1.0	RISER GAS 3/4"
1.0	COCK GAS METER 3/4"
1.0	ANODE MAGNESIUM 3 LB. WITH COVERING
1.0	CONN SPLIT/BOLT COPPER MAX #10 STR

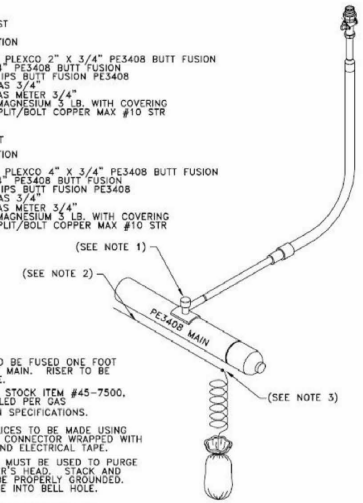

NOTES:

1) PURGE TEE TO BE FUSED ONE FOOT FROM END OF MAIN. RISER TO BE FUSED TO TEE.
2) TRACER WIRE, STOCK ITEM #45-7500, TO BE INSTALLED PER GAS CONSTRUCTION SPECIFICATIONS.
3) ALL WIRE SPLICES TO BE MADE USING A SPLIT BOLT CONNECTOR WRAPPED WITH AQUA-SEAL AND ELECTRICAL TAPE.
4) PURGE STACK MUST BE USED TO PURGE ABOVE WORKER'S HEAD. STACK AND RISER MUST BE PROPERLY GROUNDED. DO NOT PURGE INTO BELL HOLE.
5) END CAP TO BE FUSED TO TEE AFTER PURGING IS COMPLETE, THEN SOAP TESTED UNDER OPERATING PRESSURE. LEAVE SERVICE TEE VALVE IN THE CLOSED POSITION.

CAP & PURGE DETAIL

SCALE: NONE

STANDARD GAS DETAILS

DATE	REVISION	BY

PROJECT NO.	4109-40
FILE NAME	OG2GD-2.dwg
DESIGNED BY	
DRAWN BY	
CHECKED BY	
REVIEWED BY	
DATE	AUGUST, 2007
SCALE	NTS

© MSE OF KENTUCKY, INC. THIS DRAWING IS THE PROPERTY OF MSE OF KENTUCKY, INC. REPRODUCTION OR USE FOR OTHER THAN THE PROJECT SHOWN HEREON IS PROHIBITED WITHOUT WRITTEN PERMISSION.

MSE OF KENTUCKY, INC.
Engineers
Architects
Planners
624 Wallington Way
Lexington, KY 40503
www.mselex.com
PHONE: (859)223-5694
FAX: (859)223-2607

DRAWING NO.

GD-2

SHEET OF

TITLEC.DWG